SITE PLAN

FOR

ASI INDUSTRIAL PARK PLAT 1, LOT 1

7002 SE DELAWARE AVENUE
CITY OF ANKENY, POLK COUNTY, IOWA

OWNER/APPLICANT
A & N PROPERTIES, LLC.
221 SE MAGAZINE ROAD
ANKENY, IOWA 50021
CONTACT: ANDREW LARSON
PHONE: (515) 964-5229

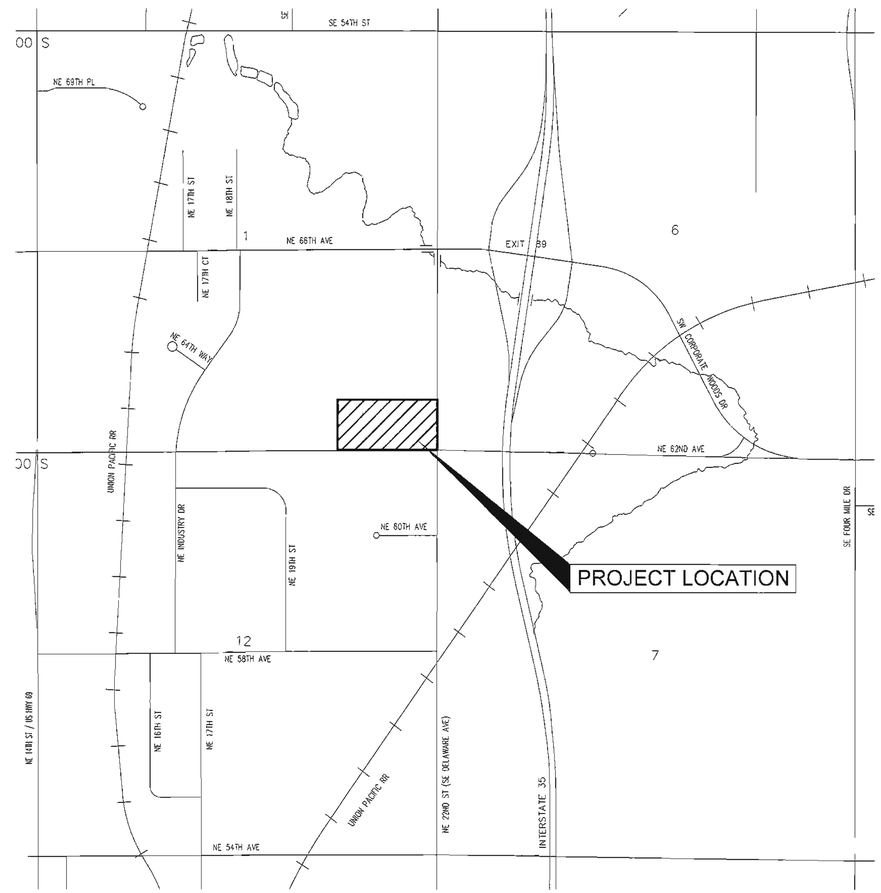

SCALE: 1"=1000'

VICINITY MAP

city of Ankeny
bringing it all together

INDEX OF SHEETS

1. TITLE SHEET
2. PROJECT INFORMATION
3. EXISTING SITE CONDITIONS
4. OVERALL SITE LAYOUT
5. DIMENSION & UTILITY PLAN
6. DIMENSION & UTILITY PLAN
7. DIMENSION & UTILITY PLAN
8. DIMENSION & UTILITY PLAN
9. GRADING & EROSION CONTROL NOTES & DETAILS
10. OVERALL GRADING AND EROSION CONTROL PLAN
11. DETAILED GRADING PLAN
12. DETAILED GRADING PLAN
13. DETAILED GRADING PLAN
14. DETAILED GRADING PLAN
15. DETAILED GRADING PLAN
16. PLANTING PLAN
17. PLANTING PLAN DETAILS & NOTES
18. SITE DETAILS
19. SITE DETAILS
20. SITE DETAILS
21. SITE DETAILS

RECEIVED
APR 26 2019
CITY OF ANKENY

MARK	REVISION	DATE	BY
2	REVISED PER CITY COMMENTS	4-26-19	AWS
1	REVISED PER CITY COMMENTS	4-05-19	AWS

Engineer: CDD | Checked By: BKC | Scale: 1" = 1000'
Technician: AWS | Date: 03-01-2019 | Field Bk: Pg:
118.0994

Sheet 1 of 21

ASI INDUSTRIAL PARK PLAT 1, LOT 1
ANKENY, IOWA

TITLE SHEET

SNYDER & ASSOCIATES, INC.
2727 S.W. SNYDER BLVD.
ANKENY, IOWA 50023
515-964-2020 | www.snyder-associates.com

SNYDER & ASSOCIATES

118.0994

Sheet 1 of 21

LEGEND

FEATURES	EXISTING	PROPOSED
Spot Elevation	x 93.0	x 93.0
Contour Elevation	60	60
Fence (Barbed, Field, Hog)	xe	
Fence (Chain Link)	xc	
Fence (Wood)	xwo	
Fence (Silt)		
Tree Line		
Tree Stump		
Deciduous Tree \\ Shrub		
Coniferous Tree \\ Shrub		
Communication	CO1(*)	
Overhead Communication	CO1(*)	
Fiber Optic	FO1(*)	
Underground Electric	UE1(*)	
Overhead Electric	OE1(*)	
Gas Main with Size	1"G1(*)	
High Pressure Gas Main with Size	4"HFG1(*)	
Water Main with Size	8"W1(*)	W
Sanitary Sewer with Size	8"S1(*)	>
Duct Bank		
Test Hole Location for SUE w/ID	SUE 1	

(*) Denotes the survey quality service level for utilities

Sanitary Manhole		
Storm Sewer with Size	12" RCP	12" RCP
Storm Manhole		
Single Storm Sewer Intake		
Double Storm Sewer Intake		
Fire Hydrant		
Fire Hydrant on Building		
Water Main Valve		
Water Service Valve		
Well		
Utility Pole		
Guy Anchor		
Utility Pole with Light		
Utility Pole with Transformer		
Street Light		
Yard Light		
Electric Box		
Electric Transformer		
Traffic Sign		
Communication Pedestal		
Communication Manhole		
Communication Handhole		
Fiber Optic Manhole		
Fiber Optic Handhole		
Gas Valve		
Gas Manhole		
Gas Apparatus		
Fence Post or Guard Post		
Underground Storage Tank		
Above Ground Storage Tank		
Sign	UST	
Satellite Dish	AST	
Mailbox		
Sprinkler Head		
Irrigation Control Valve	ICV	

UTILITY QUALITY SERVICE LEVELS

QUALITY LEVELS OF UTILITIES ARE SHOWN IN THE PARENTHESES WITH THE UTILITY TYPE AND WHEN APPLICABLE, SIZE. THE QUALITY LEVELS ARE BASED ON THE CI / ASCE 38-02 STANDARD.

QUALITY LEVEL (D) INFORMATION IS DERIVED FROM EXISTING UTILITY RECORDS OR ORAL RECOLLECTIONS.

QUALITY LEVEL (C) INFORMATION IS OBTAINED BY SURVEYING AND PLOTTING VISIBLE ABOVE-GROUND UTILITY FEATURES AND USING PROFESSIONAL JUDGMENT IN CORRELATING THIS INFORMATION WITH QUALITY D INFORMATION.

QUALITY LEVEL (B) INFORMATION IS OBTAINED THROUGH THE APPLICATION OF APPROPRIATE SURFACE GEOPHYSICAL METHODS TO DETERMINE THE EXISTENCE AND APPROXIMATE HORIZONTAL POSITION OF SUBSURFACE UTILITIES.

QUALITY LEVEL (A) IS HORIZONTAL AND VERTICAL POSITION OF UNDERGROUND UTILITIES OBTAINED BY ACTUAL EXPOSURE OR VERIFICATION OF PREVIOUSLY EXPOSED SUBSURFACE UTILITIES, AS WELL AS THE TYPE, SIZE, CONDITION, MATERIAL, AND OTHER CHARACTERISTICS.

UTILITY CONTACT INFORMATION

ST-STORM SEWER	CITY OF ANKENY - STORMWATER JARED BRIGHT 515-963-3534 jbright@ankenyiowa.gov	CO2-COMMUNICATION	MCI/VERIZON Dean Boyers 469-886-4238 dean.boyers@verizon.com
W1-WATER MAIN	CITY OF ANKENY - WATER SHAWN BUCKNER 515-963-3524 sbuckner@ankenyiowa.gov	CO4-COMMUNICATION	MEDIACOM COMMUNICATIONS CORP Paul May 515-246-2252 pmay@mediacomcc.com
S1-SANITARY SEWER	CITY OF ANKENY - SANITARY SEWER ROGER MCFARLAND 515-965-6483 rmcfarland@ankenyiowa.gov	CO1-COMMUNICATION	UNITE PRIVATE NETWORKS, LLC Joe Kilzer 816-425-3556 upngis@upnfiber.com
CO3-COMMUNICATION	CENTURYLINK DUSTIN WITHERS 515-263-7202 Thomas.sturmer@centurylink.com	FO1-FIBER OPTIC	WINDSTREAM COMMUNICATIONS LOCATE DESK 800-289-1901 LOCATE.DESK@WINDSTREAM.COM
FO2-FIBER OPTIC	AUREON NETWORK SERVICES JEFF KLOCKO 515-830-0445 jeff.klocko@aureon.com	S2-SANITARY SEWER	WRA/PRIVATE LINE
G1-GAS MAIN OE1-OVERHEAD ELECTRIC UE1-UNDERGROUND ELECTRIC	MID AMERICAN ENERGY THERESA MCGUIRE 515-281-2260 tmmcguire@midamerican.com		

GENERAL NOTES

A. NOTIFY UTILITY PROVIDERS PRIOR TO BEGINNING ANY CONSTRUCTION ACTIVITIES AND COORDINATE WITH UTILITY PROVIDERS AS NECESSARY DURING CONSTRUCTION. CONTRACTOR IS RESPONSIBLE FOR DETERMINING EXISTENCE, EXACT LOCATION, AND DEPTH OF ALL UTILITIES. PROTECT ALL UTILITY LINES AND STRUCTURES NOT SHOWN FOR REMOVAL OR MODIFICATION. ANY DAMAGES TO UTILITY ITEMS NOT SHOWN FOR REMOVAL OR MODIFICATION SHALL BE REPAIRED TO THE UTILITY OWNER'S SPECIFICATIONS AT THE CONTRACTOR'S EXPENSE.

B. CONSTRUCTION OF ALL STREET AND UTILITY IMPROVEMENTS SHALL CONFORM TO THE 2019 SUDAS STANDARD SPECIFICATIONS. THE CITY OF ANKENY SUPPLEMENTAL SPECIFICATIONS FOR PUBLIC IMPROVEMENTS AND THE SOILS REPORT PREPARED BY CONSTRUCTION MATERIAL TESTING, PROJECT NO. 190614 BPM, DATED MARCH 8 2019 WITH EMAIL ADDENDUM DATED MARCH 14, 2019.

C. LENGTH OF UTILITIES SHOWN ON PLANS ARE DIMENSIONED FROM CENTERLINE OF STRUCTURE TO CENTERLINE OF STRUCTURE.

D. ALL TRAFFIC CONTROL SHALL BE PROVIDED IN ACCORDANCE WITH REQUIREMENTS SET FORTH IN THE MANUAL ON UNIFORM TRAFFIC CONTROL DEVICES (MUTCD). WHEN CONSTRUCTION ACTIVITIES OBSTRUCT PORTIONS OF THE ROADWAY, FLAGGERS SHALL BE PROVIDED. FLAGGERS SHALL CONFORM TO THE MUTCD IN APPEARANCE, EQUIPMENT AND ACTIONS.

E. NOTIFY OWNER, ENGINEER, AND CITY OF ANKENY AT LEAST 48 HOURS PRIOR TO BEGINNING WORK.

F. CONSTRUCT MANHOLES AND APPURTENANCES AS WORK PROGRESSES. BACKFILL WITH SUITABLE MATERIAL AND COMPACT TO 95% MAXIMUM DENSITY.

G. IN THE EVENT OF A DISCREPANCY BETWEEN THE QUANTITY ESTIMATES AND THE DETAILED PLANS, THE DETAILED PLANS SHALL GOVERN.

H. ALL FIELD TILES ENCOUNTERED DURING CONSTRUCTION SHALL BE RECONNECTED AND NOTED ACCORDINGLY ON THE AS-BUILT DOCUMENTS.

I. DIMENSIONS, BUILDING LOCATION, UTILITIES AND GRADING OF THIS SITE ARE BASED ON AVAILABLE INFORMATION AT THE TIME OF DESIGN. DEVIATIONS MAY BE NECESSARY IN THE FIELD. ANY SUCH CHANGES OR CONFLICTS BETWEEN THIS PLAN AND FIELD CONDITIONS ARE TO BE REPORTED TO THE ARCHITECT/ENGINEER PRIOR TO STARTING CONSTRUCTION. THE CONTRACTOR SHALL BE RESPONSIBLE FOR LAYOUT VERIFICATION OF ALL SITE IMPROVEMENTS PRIOR TO CONSTRUCTION.

J. CONTRACTOR TO LOAD AND TRANSPORT ALL MATERIALS CONSIDERED TO BE UNDESIRABLE TO BE INCORPORATED INTO THE PROJECT TO AN APPROVED OFF-SITE WASTE SITE.

K. CONTRACTOR TO STRIP AND STOCKPILE TOPSOIL FROM ALL AREAS TO BE CUT OR FILLED. RESPREAD TO MINIMUM 6" DEPTH TO FINISH GRADES.

L. ALL PROPOSED CONTOURS AND SPOT ELEVATIONS SHOWN ARE FINISHED GRADES AND/OR TOP OF PAVING SLAB (GUTTER), UNLESS OTHERWISE NOTED.

M. THE CONTRACTOR IS RESPONSIBLE FOR CLEANING DIRT AND DEBRIS FROM NEIGHBORING STREETS, DRIVEWAYS, AND SIDEWALKS CAUSED BY CONSTRUCTION ACTIVITIES IN A TIMELY MANNER.

N. THE ADJUSTMENT OF ANY EXISTING UTILITY APPURTENANCES TO FINAL GRADE IS CONSIDERED INCIDENTAL TO THE SITE WORK.

O. THE CONTRACTOR SHALL BE RESPONSIBLE FOR INSTALLING EROSION CONTROL MEASURES AS NECESSARY. CONTRACTOR SHALL ALSO BE RESPONSIBLE FOR MAINTAINING ANY EXISTING EROSION CONTROL MEASURES ON SITE AT THE TIME OF CONSTRUCTION. GRADING AND SOIL EROSION CONTROL CODE REQUIREMENTS SHALL BE MET BY CONTRACTOR. A GRADING PERMIT IS REQUIRED FOR THIS PROJECT.

P. CONTRACTOR TO COORDINATE NATURAL GAS, ELECTRICAL, TELEPHONE AND ANY OTHER FRANCHISE UTILITY SERVICES WITH UTILITY SERVICE PROVIDER, CITY OF ANKENY, AND THE OWNER PRIOR TO CONSTRUCTION.

Q. CONTRACTOR TO VERIFY ALL UTILITY CROSSINGS AND MAINTAIN MINIMUM 18" VERTICAL AND HORIZONTAL CLEARANCE BETWEEN UTILITIES. CONTRACTOR TO COORDINATE UTILITY ROUTING TO BUILDING AND VERIFY CONNECTION LOCATIONS AND INVERTS PRIOR TO CONSTRUCTION.

R. ALL ROOF TOP UNITS SHALL BE SCREENED FROM PUBLIC VIEW.

S. CONTRACTOR SHALL CONTACT THE PROPERTY OWNER TO THE NORTH (GRAHAM WAREHOUSE) A MINIMUM OF 1 WEEK PRIOR TO BEGINNING CONSTRUCTION OF THE 42-INCH STORM SEWER IMPROVEMENTS ON THEIR PROPERTY.

UTILITY WARNING

THE UTILITIES SHOWN HAVE BEEN LOCATED FROM FIELD SURVEY INFORMATION AND/OR RECORDS OBTAINED. THE SURVEYOR MAKES NO GUARANTEE THAT THE UTILITIES OR SUBSURFACE FEATURES SHOWN COMPRISE ALL SUCH ITEMS IN THE AREA, EITHER IN SERVICE OR ABANDONED. THE SURVEYOR FURTHER DOES NOT WARRANT THAT THE UTILITIES OR SUBSURFACE FEATURES SHOWN ARE IN THE EXACT LOCATION INDICATED EXCEPT WHERE NOTED AS QUALITY LEVEL A.

CONTROL POINTS

IOWA REGIONAL COORDINATE SYSTEM ZONE 8 (AMES-DES MOINES)
NAD83(2011)(EPOCH 2010.00) IARTN DERIVED - US SURVEY FEET

CP12 N=7519220.79 E=18536955.44 Z=917.04
FOUND CEC CONTROL CAP, BOTTOM OF DITCH, +/-50' SOUTHEAST OF SANITARY MANHOLE. (AS SHOWN ON SURVEY)

CP13 N=7518611.92 E=18536995.11 Z=936.61
FOUND PK NAIL IN CENTERLINE OF SE DELAWARE AVENUE, SOUTHEAST CORNER OF SECTION 1-79-24, SOUTHEAST CORNER OF SITE. (AS SHOWN ON SURVEY)

CP14 N=7518597.11 E=18535675.65 Z=943.53
FOUND 1/2" REBAR WITH YELLOW PLASTIC CAP, UNREADABLE, SOUTHWEST CORNER OF SOUTHEAST 1/4 OF THE SOUTHEAST 1/4 OF SECTION 1-79-24, SOUTHWEST CORNER OF SITE. (AS SHOWN ON SURVEY)

CP15 N=7519283.25 E=18535697.57 Z=934.38
1/2" REBAR WITH RED PLASTIC CONTROL CAP, NORTHWEST CORNER OF SITE, +/-25' NORTHEAST OF H2O VENT, +/-50' SOUTH-SOUTHEAST OF H2O VALVE AND +/-5' EAST OF T-POST. (AS SHOWN ON SURVEY)

BENCHMARKS

NORTH AMERICAN VERTICAL DATUM OF 1988 (NAVD88 - GEOID12A)
IARTN DERIVED - US SURVEY FEET

BM10 ELEV=942.76
CUT "X" ON EAST SIDE OF CONCRETE COLUMN, SOUTHEAST LEG OF OVERHEAD TRANSMISSION LINE, SOUTHWEST CORNER OF SITE. (AS SHOWN ON SURVEY)

BM11 ELEV=924.06
CUT "X" ON WEST SIDE OF CONCRETE COULMN, NORTHWEST LEG OF OVERHEAD TRANSMISSION LINE, MIDDLE OF SITE. (AS SHOWN ON SURVEY)

PROPERTY DESCRIPTION

LOT 1 OF ASI INDUSTRIAL PARK PLAT 1, AN OFFICIAL PLAT NOW INCLUDED IN AND FORMING A PART OF THE CITY OF ANKENY, POLK COUNTY, IOWA AND INCLUDING 12.41 AC (540,479 S.F.).

PROPERTY SUBJECT TO ANY AND ALL EASEMENTS OF RECORD.

PROPERTY ADDRESS

7002 SE DELAWARE AVENUE
ANKENY, IOWA 50021

ZONING

M-1: LIGHT INDUSTRIAL DISTRICT WITH CONDITIONS

BULK REGULATIONS

FRONT YARD SETBACK = 50'
REAR YARD SETBACK = 40'
SIDE YARD SETBACK = NONE; EXCEPT
WHEN ADJACENT RESIDENTIAL OR ROW = 50'
MAXIMUM HEIGHT = 75'
MAXIMUM STORIES = 5

PARKING REQUIREMENTS

OFFICE 10,880 SF - 1 SPACE/400 SF
10,880 / 400 = 28 SPACES
SERVICE BAYS - 1 SPACE PER 2 EMPOYEES ON MAXIMUM SHIFT (10 BAYS, 10 EMPLOYEES)
10 EMPLOYEES / 2 = 5 SPACES
TRUCK OPERATORS - 55 TRUCKS = 55 SPACES
TOTAL 88 SPACES REQUIRED
88 SPACES PROVIDED (INCLUDING 4 HANDICAP STALLS)

BUILDING INFORMATION

TOTAL BUILDING	27,280 SF
COLD STORAGE	3,800 SF
WASH BAY	2,400 SF
SERVICE BAYS	10,200 SF
OFFICE (2-STORY)	10,880 SF

NUMBER OF EMPLOYEES

TOTAL NUMBER OF EMPLOYEES = 85
INCLUDING 25 ON-SITE.

ERU CALCULATIONS

218,681 SF HARD SURFACE /4000
= 55 EQUIVALENT RESIDENTIAL UNITS

IOWA ONE CALL
1-800-292-8989
www.iowaonecall.com

MARK	REVISION	DATE	BY
2	REVISED PER CITY COMMENTS	4-26-19	AWS
1	REVISED PER CITY COMMENTS	4-05-19	AWS

Engineer: CDD | Checked By: BKC | Scale: 1" = 1'
Technician: AWS | Date: 03-01-2019 | Field Bk: | Pg:
118.0994

Sheet 2 of 21

ASI INDUSTRIAL PARK PLAT 1, LOT 1
PROJECT INFORMATION
ANKENY, IOWA

SNYDER & ASSOCIATES, INC.
2727 SW. SNYDER BLVD.
ANKENY, IOWA 50023
515-964-2020 | www.snyder-associates.com

SNYDER & ASSOCIATES

118.0994

Sheet 2 of 21

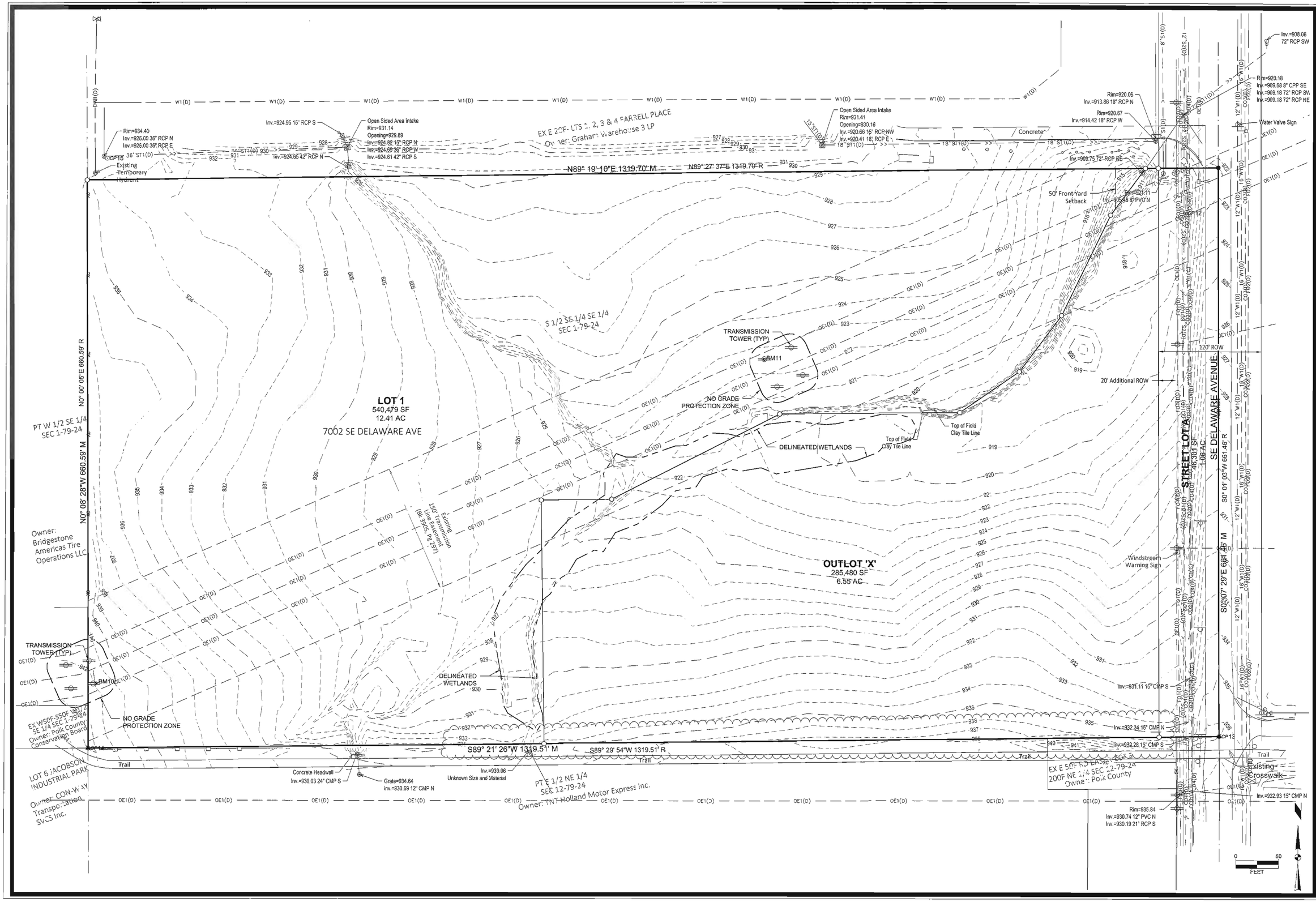

MARK	REVISION	DATE	BY
2	REVISED PER CITY COMMENTS	4-26-19	AWS
1	REVISED PER CITY COMMENTS	4-05-19	AWS

Engineer: CDD | Checked By: BKC | Scale: 1" = 50
Technician: AWS | Date: 03-01-2019 | Field Bk: | Pg:

118.0994

Sheet 3 of 21

ASI INDUSTRIAL PARK PLAT 1, LOT 1

ANKENY, IOWA

EXISTING SITE CONDITIONS

SNYDER & ASSOCIATES, INC.
2727 S.W. SNYDER BLVD.
ANKENY, IOWA 50023
515-964-2020 | www.snyder-associates.com

SNYDER & ASSOCIATES

118.0994

Sheet 3 of 21

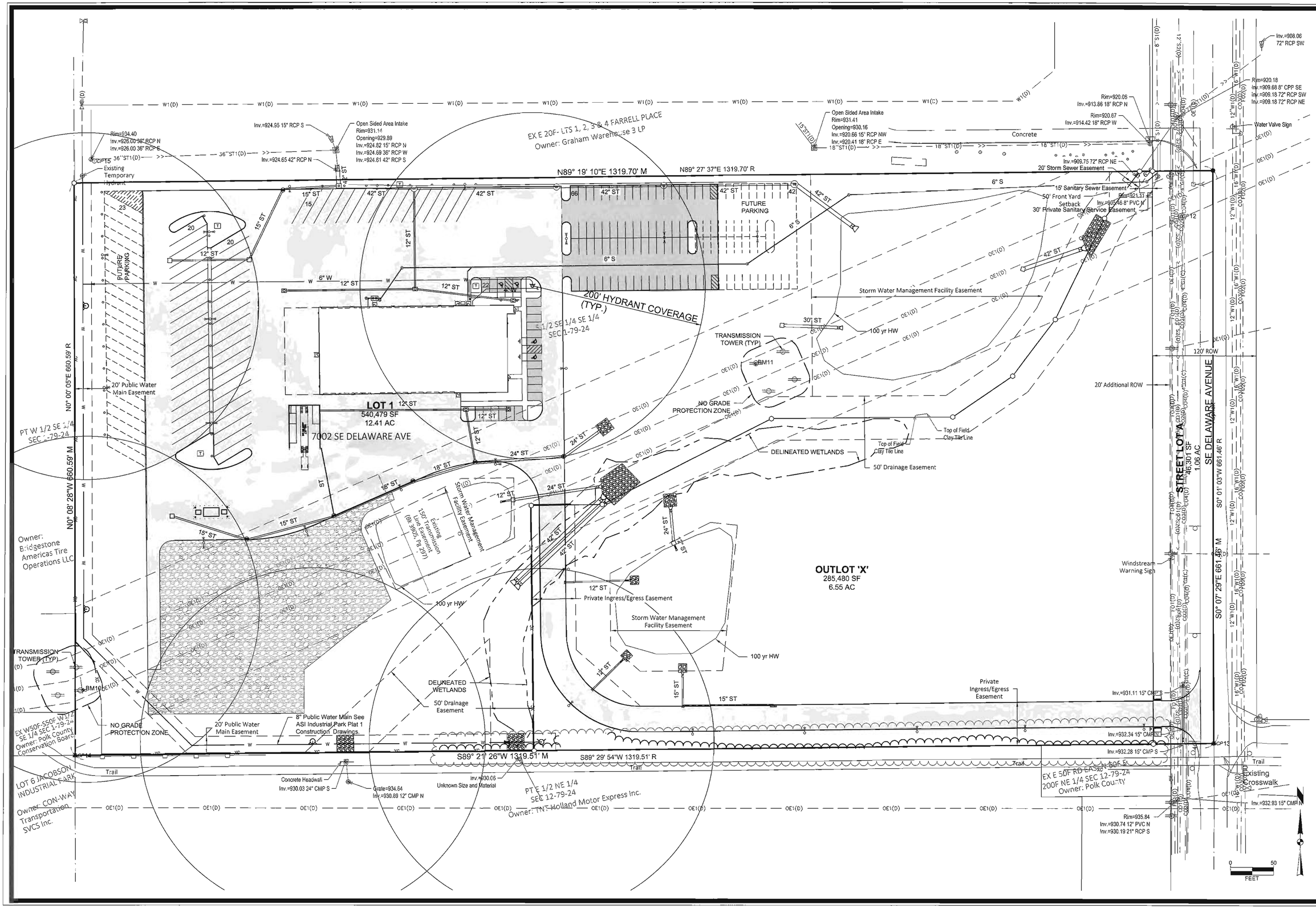

MARK	REVISION	DATE	BY
2	REVISED PER CITY COMMENTS	4-26-19	AWS
1	REVISED PER CITY COMMENTS	4-05-19	AWS

Engineer: CDD | Checked By: BKC | Scale: 1" = 50'
Technician: AWS | Date: 03-01-2019 | Field Bk: | Pg:
118.0984

Sheet 4 of 21

ANKENY, IOWA

ASI INDUSTRIAL PARK PLAT 1, LOT 1

OVERALL SITE LAYOUT

SNYDER & ASSOCIATES, INC.
2727 S.W. SNYDER BLVD.
ANKENY, IOWA 50023
515-964-2020 | www.snyder-associates.com

SNYDER & ASSOCIATES

118.0994

Sheet 4 of 21

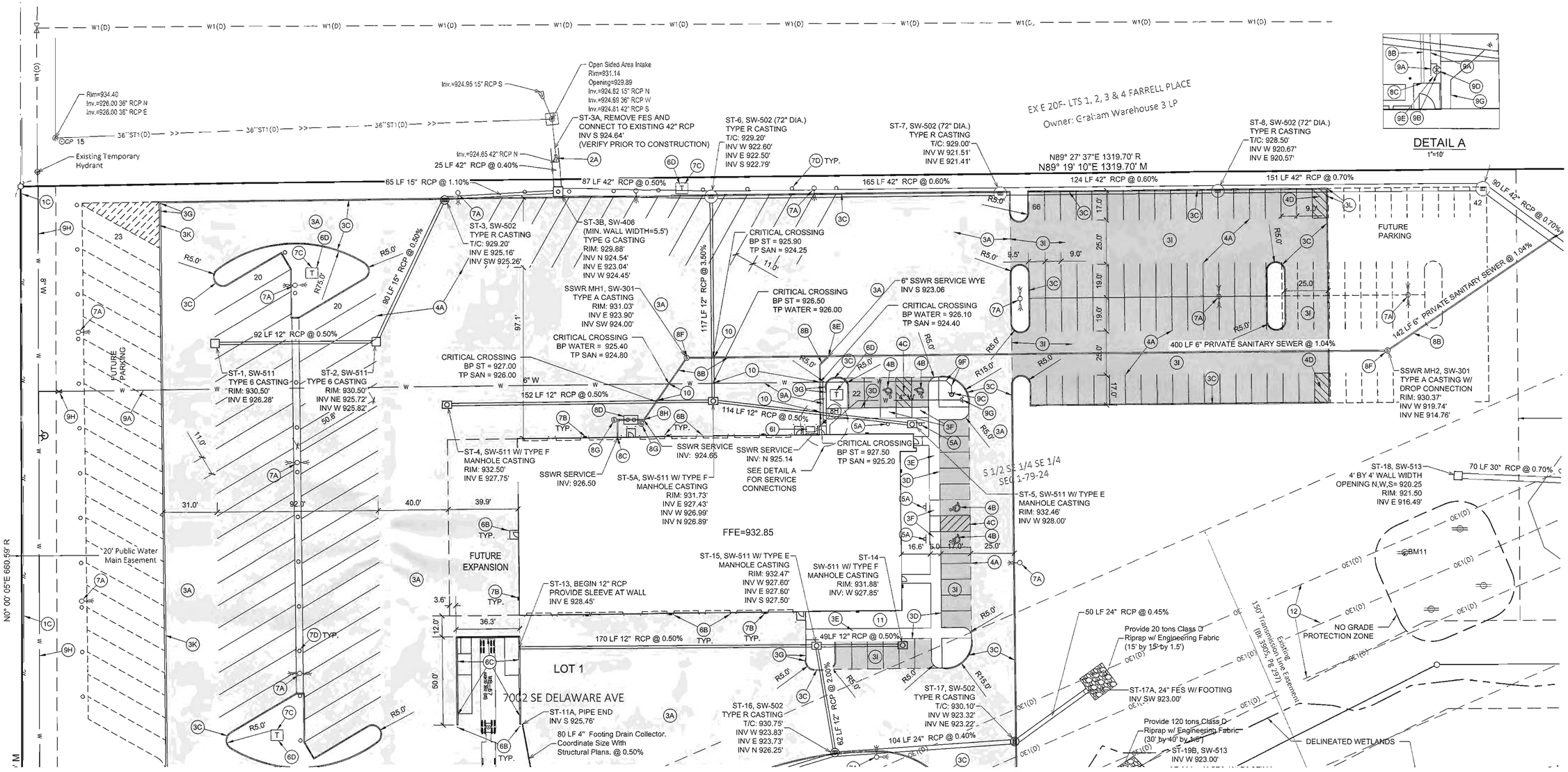

DIMENSION & UTILITY PLAN NOTES

1. EXISTING FEATURES, PROTECT THE FOLLOWING:
   A. EXISTING PAVEMENT.
   B. EXISTING UTILITIES. COORDINATE ANY RELOCATIONS OR ADJUSTMENTS WITH THE UTILITY SERVICE PROVIDER AS NECESSARY.
   C. EXISTING FENCE.
   D. REMOVE AND RELOCATE EXISTING BIKE TRAIL SIGN . COORDINATE WITH CITY OF ANKENY AND POLK COUNTY.
   E. BIKE ROUTE/NO MOTOR VEHICLES SIGNS.
   F. EXISTING TREES.
2. DEMOLITION, REMOVE THE FOLLOWING:
   A. REMOVE EXISTING 42" FES.
   B. REMOVE EXISTING TREES INCLUDING STUMPS AND ROOT SYSTEM TO A MINIMUM 24" DEPTH.
   C. 15" CMP CULVERT.
3. PAVEMENTS, PROVIDE THE FOLLOWING:
   A. DRIVES AND PARKING, 8" PCC WITH CD JOINTS AND 12" DEPTH PREPARED SUBGRADE COMPACTED TO 95% STANDARD PROCTOR DENSITY.
   B. FULL DEPTH SAWCUT TO A CLEAN VERTICAL EDGE AND CONNECT TO EXISTING PAVEMENT WITH SUDAS TYPE "A" CONNECTION (2030.101). MATCH EXISTING ELEVATIONS.
   C. 6" STANDARD CURB. SEE DETAIL
   D. INTEGRAL CURB AND SIDEWALK. SEE DETAIL.
   E. 4" DEPTH PCC SIDEWALK.
   F. PEDESTRIAN RAMPS WITH 8.3% MAXIMUM LONGITUDINAL SLOPE AND DETECTABLE WARNINGS PER ADAAG REQUIREMENTS WHERE SHOWN.
   G. TAPER CURB.
   H. 30' WIDE CURB OPENING TO GRANULAR SURFACE (TRUCK ENTRANCE).
   I. DRIVES AND PARKING, 6" PCC WITH 12" DEPTH PREPARED SUBGRADE COMPACTED TO 95% STANDARD PROCTOR DENSITY.
   J. 6" DEPTH PCC TRAIL. SEE PLAN FOR WIDTHS.
   K. 3" ROLLED CURB. SEE DETAIL.
   L. PROVIDE 3' WIDE CURB OPENING FOR TEMPORARY OVERFLOW.
4. PAVEMENT MARKINGS, PROVIDE THE FOLLOWING:
   A. 4" WIDE PAINTED PARKING STALL LINES.
   B. PAINTED STATE OF IOWA APPROVED ACCESSIBLE PARKING SYMBOL.
   C. ACCESSIBLE AISLE. 45° STRIPING AT 3' ON CENTER SPACING WHERE SHOWN.
   D. 45° STRIPING AT 3' ON CENTER SPACING WHERE SHOWN.
5. SIGNS, PROVIDE THE FOLLOWING:
   A. PROVIDE VAN ACCESSIBLE PARKING SIGNAGE AS PER ADAAG REQUIREMENTS.
6. PROVIDE THE FOLLOWING SITE IMPROVEMENTS WHERE SHOWN ON PLAN.
   A. 7" DEPTH GRANULAR SURFACING AREA FOR ROLL-OFF DUMPSTERS. SEE DETAIL.
   B. BOLLARDS.
   C. DETACHED LOADING DOCK WITH DOCK PLATE AND MINIMUM 36" HIGH PCC BARRIER WALLS, GALVANIZED TUBULAR SAFETY RAILING AND DETACHABLE SAFETY CHAIN WHEN REQUIRED BY OWNER. SEE STRUCTURAL PLAN. SEE OWNER'S PLAN.
   D. TRANSFORMER PAD. COORDINATE SIZE AND LOCATION WITH MID-AMERICAN ENERGY AND MECHANICAL PLANS.
   E. 8' OPAQUE FENCE.
   F. 6' CHAIN LINK FENCE.
   G. SLIDING GATE.
   H. 12,000 GALLON DUAL WALL FUELING STATION WITH PCC FOOTING. SEE OWNER'S PLANS.
   I. GENERATOR WITH PCC PAD. SEE MECHANICAL PLANS.
7. SITE LIGHTING, PROVIDE THE FOLLOWING:
   A. STREET LIGHT. SEE TESDELL LIGHTING PLAN.
   B. WALL MOUNTED LIGHT. SEE TESDELL LIGHTING PLAN.
   C. CONTRACTOR TO COORDINATE WITH THE UTILITY OWNER AND PROPERTY OWNER ALL ASPECTS OF ELECTRICAL SERVICE.
   D. BLOCK HEATER RECEPTACLES. SEE TESDELL LIGHTING PLANS.
8. PRIVATE SANITARY SEWER SERVICE, PROVIDE AND INSTALL THE FOLLOWING:
   A. CONNECT TO EXISTING SANITARY SEWER MAIN WITH MANUFACTURED WYE. VERIFY LOCATION AND ELEVATION PRIOR TO CONSTRUCTION.
   B. 6" PVC SANITARY SEWER SERVICE LINE AT A MINIMUM 1.0% SLOPE (1/8" PER FOOT). PROVIDE 1:1 RISER AS NECESSARY.
   C. COORDINATE THE EXACT LOCATION AND DEPTH WHERE SANITARY SEWER SERVICE LINE ENTERS THE BUILDING WITH THE ARCHITECTURAL AND MECHANICAL PLANS PRIOR TO CONSTRUCTION.
   D. SAND AND OIL SEPARATOR. SEE MECHANICAL PLANS.
   E. 6" WYE.
   F. SANITARY MANHOLE.
   G. SANITARY CLEANOUT.
   H. PROVIDE 1:1 RISER AS NECESSARY TO MEET INVERT ELEVATIONS.
9. WATER SERVICE FROM CITY OF ANKENY, PROVIDE THE FOLLOWING AS PER CITY REQUIREMENTS AND GUIDELINES:
   A. 6" WATER SERVICE LINE. THE SERVICE LINE TO THE RW VALVE IS A PART OF ASI INDUSTRIAL PARK PLAT 1 PUBLIC IMPROVEMENTS.
   B. 2" DOMESTIC WATER SERVICE LINE.
   C. 6" HYDRANT ASSEMBLY.
   D. 2" VALVE. CURB STOP TO BE ENCASED IN CONCRETE.
   E. COORDINATE THE EXACT LOCATION, SIZE AND ELEVATION WHERE WATER SERVICE LINE ENTERS THE BUILDING WITH THE ARCHITECTURAL AND MECHANICAL PLANS PRIOR TO CONSTRUCTION.
   F. 45° BEND.
   G. REMOTE 4" FIRE DEPARTMENT CONNECTION. FIRE PROTECTION CONTRACTOR TO VERIFY SIZE WITH THEIR HYDRAULIC CALCULATIONS FOR THE BUILDING. SEE MECHANICAL PLANS.
   H. 8" PUBLIC WATER MAIN. REFER TO ASI INDUSTRIAL PARK PLAT 1 CONSTRUCTION DRAWINGS FOR ADDITIONAL INFORMATION.
10. CONTRACTOR TO MAINTAIN 18" MINIMUM SEPARATION BETWEEN UTILITIES. VERIFY SEPARATION PRIOR TO CONSTRUCTION.
11. BUILDING DOWNSPOUT LOCATION. VERIFY WITH ARCHITECTURAL PLANS. CONTRACTOR TO COORDINATE DOWNSPOUT CONNECTION PRIOR TO CONSTRUCTION.
12. PLEASE NOTE THAT THESE ELECTRIC LINES ARE CONTINUOUSLY ENERGIZED. THE CONDUCTORS ON THESE ELECTRIC LINES ARE BARE AND UNINSULATED AND CONTACT WITH THESE ELECTRIC LINES CAN CAUSE SERIOUS INJURY OR DEATH. ALL PEOPLE INVOLVED WITH ANY ACTIVITY WITHIN THE VICINITY OF THESE ELECTRIC LINES MUST BE AWARE AND REMAIN AWARE OF THE HAZARDS OF WORKING AROUND THESE ELECTRIC LINES, INCLUDING MAINTAINING PROPER SAFETY CLEARANCES FROM THESE ELECTRIC LINES.

0 30
FEET

MARK	REVISION	DATE	BY
2	REVISED PER CITY COMMENTS	4-26-19	AWS
1	REVISED PER CITY COMMENTS	4-05-19	AWS

Engineer: CDD | Checked By: BKC | Scale: 1" = 30'
Technician: AWS | Date: 03-01-2019 | Field Bk: | Pg:

118.0994

Sheet 5 of 21

ASI INDUSTRIAL PARK PLAT 1, LOT 1

ANKENY, IOWA

DIMENSION & UTILITY PLAN

SNYDER & ASSOCIATES, INC.
2727 S.W. SNYDER BLVD.
ANKENY, IOWA 50023
515-964-2020 | www.snyder-associates.com

SNYDER & ASSOCIATES

118.0994

Sheet 5 of 21

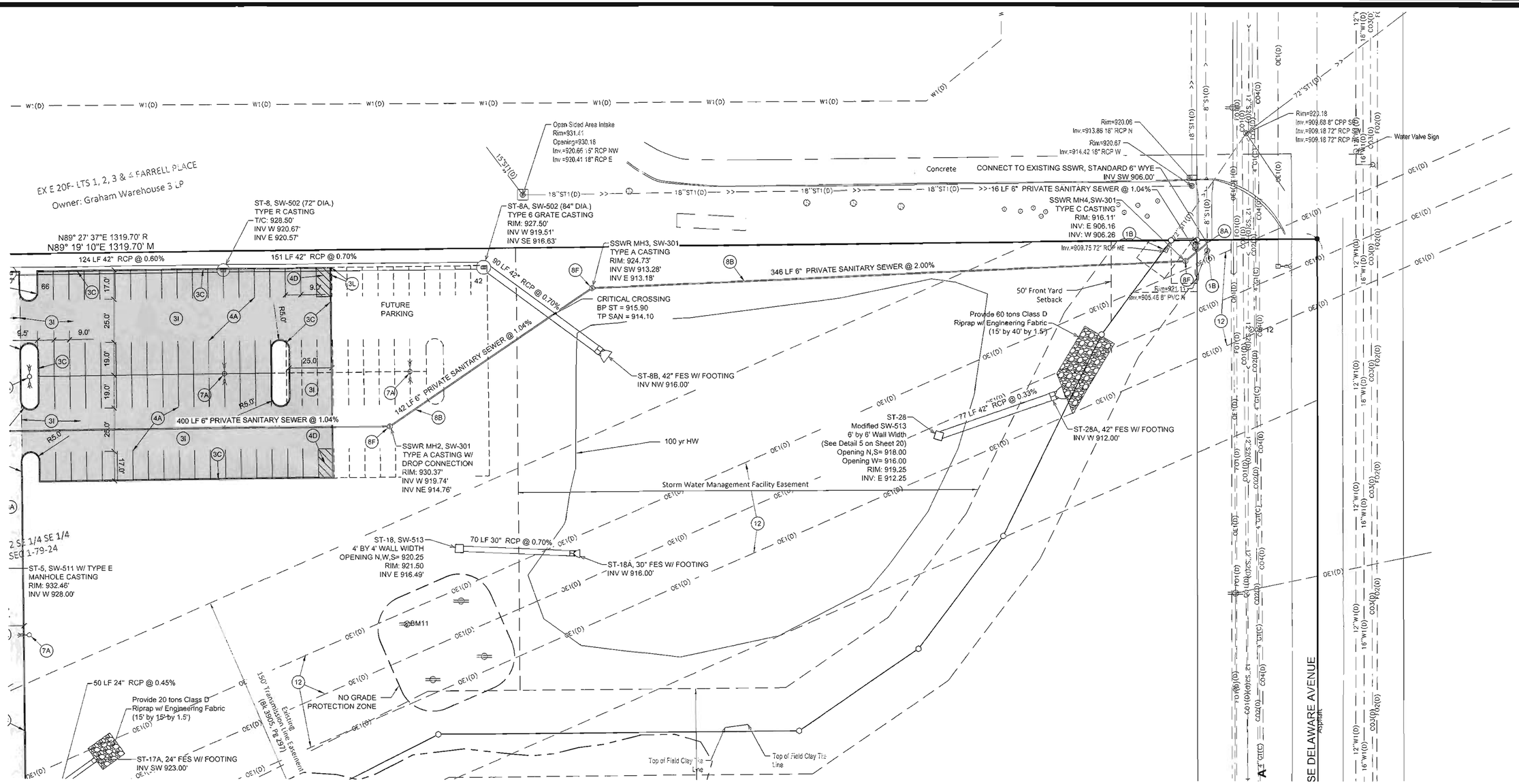

DIMENSION & UTILITY PLAN NOTES

1. EXISTING FEATURES, PROTECT THE FOLLOWING:
   A. EXISTING PAVEMENT.
   B. EXISTING UTILITIES. COORDINATE ANY RELOCATIONS OR ADJUSTMENTS WITH THE UTILITY SERVICE PROVIDER AS NECESSARY.
   C. EXISTING FENCE.
   D. REMOVE AND RELOCATE EXISTING BIKE TRAIL SIGN . COORDINATE WITH CITY OF ANKENY AND POLK COUNTY.
   E. BIKE ROUTE/NO MOTOR VEHICLES SIGNS.
   F. EXISTING TREES.
2. DEMOLITION, REMOVE THE FOLLOWING:
   A. REMOVE EXISTING 42" FES.
   B. REMOVE EXISTING TREES INCLUDING STUMPS AND ROOT SYSTEM TO A MINIMUM 24" DEPTH.
   C. 15" CMP CULVERT.
3. PAVEMENTS, PROVIDE THE FOLLOWING:
   A. DRIVES AND PARKING, 8" PCC WITH CD JOINTS AND 12" DEPTH PREPARED SUBGRADE COMPACTED TO 95% STANDARD PROCTOR DENSITY.
   B. FULL DEPTH SAWCUT TO A CLEAN VERTICAL EDGE AND CONNECT TO EXISTING PAVEMENT WITH SUDAS TYPE "A" CONNECTION (2030.101). MATCH EXISTING ELEVATIONS.
   C. 8" STANDARD CURB. SEE DETAIL
   D. INTEGRAL CURB AND SIDEWALK. SEE DETAIL.
   E. 4" DEPTH PCC SIDEWALK.
   F. PEDESTRIAN RAMPS WITH 8.3% MAXIMUM LONGITUDINAL SLOPE AND DETECTABLE WARNINGS PER ADAAG REQUIREMENTS WHERE SHOWN.
   G. TAPER CURB.
   H. 30' WIDE CURB OPENING TO GRANULAR SURFACE (TRUCK ENTRANCE).
   I. DRIVES AND PARKING, 6" PCC WITH 12" DEPTH PREPARED SUBGRADE COMPACTED TO 95% STANDARD PROCTOR DENSITY.
   J. 8" DEPTH PCC TRAIL. SEE PLAN FOR WIDTHS.
   K. 3" ROLLED CURB. SEE DETAIL.
   L. PROVIDE 3' WIDE CURB OPENING FOR TEMPORARY OVERFLOW.
4. PAVEMENT MARKINGS, PROVIDE THE FOLLOWING:
   A. 4" WIDE PAINTED PARKING STALL LINES.
   B. PAINTED STATE OF IOWA APPROVED ACCESSIBLE PARKING SYMBOL.
   C. ACCESSIBLE AISLE. 45° STRIPING AT 3' ON CENTER SPACING WHERE SHOWN.
   D. 45° STRIPING AT 3' ON CENTER SPACING WHERE SHOWN.
5. SIGNS, PROVIDE THE FOLLOWING:
   A. PROVIDE VAN ACCESSIBLE PARKING SIGNAGE AS PER ADAAG REQUIREMENTS.
6. PROVIDE THE FOLLOWING SITE IMPROVEMENTS WHERE SHOWN ON PLAN.
   A. 7" DEPTH GRANULAR SURFACING AREA FOR ROLL-OFF DUMPSTERS. SEE DETAIL.
   B. BOLLARDS.
   C. DETACHED LOADING DOCK WITH DOCK PLATE AND MINIMUM 36" HIGH PCC BARRIER WALLS, GALVANIZED TUBULAR SAFETY RAILING AND DETACHABLE SAFETY CHAIN WHEN REQUIRED BY OWNER. SEE STRUCTURAL PLAN. SEE OWNER'S PLAN.
   D. TRANSFORMER PAD. COORDINATE SIZE AND LOCATION WITH MID-AMERICAN ENERGY AND MECHANICAL PLANS.
   E. 6' OPAQUE FENCE.
   F. 6' CHAIN LINK FENCE.
   G. SLIDING GATE.
   H. 12,000 GALLON DUAL WALL FUELING STATION WITH PCC FOOTING. SEE OWNER'S PLANS.
   I. GENERATOR WITH PCC PAD. SEE MECHANICAL PLANS.
7. SITE LIGHTING, PROVIDE THE FOLLOWING:
   A. STREET LIGHT. SEE TESDELL LIGHTING PLAN.
   B. WALL MOUNTED LIGHT. SEE TESDELL LIGHTING PLAN.
   C. CONTRACTOR TO COORDINATE WITH THE UTILITY OWNER AND PROPERTY OWNER ALL ASPECTS OF ELECTRICAL SERVICE.
   D. BLOCK HEATER RECEPTACLES. SEE TESDELL LIGHTING PLANS.
8. PRIVATE SANITARY SEWER SERVICE, PROVIDE AND INSTALL THE FOLLOWING:
   A. CONNECT TO EXISTING SANITARY SEWER MAIN WITH MANUFACTURED WYE. VERIFY LOCATION AND ELEVATION PRIOR TO CONSTRUCTION.
   B. 6" PVC SANITARY SEWER SERVICE LINE AT A MINIMUM 1.0% SLOPE (1/8" PER FOOT). PROVIDE 1:1 RISER AS NECESSARY.
   C. COORDINATE THE EXACT LOCATION AND DEPTH WHERE SANITARY SEWER SERVICE LINE ENTERS THE BUILDING WITH THE ARCHITECTURAL AND MECHANICAL PLANS PRIOR TO CONSTRUCTION.
   D. SAND AND OIL SEPARATOR. SEE MECHANICAL PLANS.
   E. 8" WYE.
   F. SANITARY MANHOLE.
   G. SANITARY CLEANOUT.
   H. PROVIDE 1:1 RISER AS NECESSARY TO MEET INVERT ELEVATIONS.
9. WATER SERVICE FROM CITY OF ANKENY, PROVIDE THE FOLLOWING AS PER CITY REQUIREMENTS AND GUIDELINES:
   A. 6" WATER SERVICE LINE. THE SERVICE LINE TO THE RW VALVE IS A PART OF ASI INDUSTRIAL PARK PLAT 1 PUBLIC IMPROVEMENTS.
   B. 2" DOMESTIC WATER SERVICE LINE.
   C. 6" HYDRANT ASSEMBLY.
   D. 2" VALVE. CURB STOP TO BE ENCASED IN CONCRETE.
   E. COORDINATE THE EXACT LOCATION, SIZE AND ELEVATION WHERE WATER SERVICE LINE ENTERS THE BUILDING WITH THE ARCHITECTURAL AND MECHANICAL PLANS PRIOR TO CONSTRUCTION.
   F. 45° BEND.
   G. REMOTE 4" FIRE DEPARTMENT CONNECTION. FIRE PROTECTION CONTRACTOR TO VERIFY SIZE WITH THEIR HYDRAULIC CALCULATIONS FOR THE BUILDING. SEE MECHANICAL PLANS.
   H. 8" PUBLIC WATER MAIN. REFER TO ASI INDUSTRIAL PARK PLAT 1 CONSTRUCTION DRAWINGS FOR ADDITIONAL INFORMATION.
10. CONTRACTOR TO MAINTAIN 18" MINIMUM SEPARATION BETWEEN UTILITIES. VERIFY SEPARATION PRIOR TO CONSTRUCTION.
11. BUILDING DOWNSPOUT LOCATION. VERIFY WITH ARCHITECTURAL PLANS. CONTRACTOR TO COORDINATE DOWNSPOUT CONNECTION PRIOR TO CONSTRUCTION.
12. PLEASE NOTE THAT THESE ELECTRIC LINES ARE CONTINUOUSLY ENERGIZED. THE CONDUCTORS ON THESE ELECTRIC LINES ARE BARE AND UNINSULATED AND CONTACT WITH THESE ELECTRIC LINES CAN CAUSE SERIOUS INJURY OR DEATH. ALL PEOPLE INVOLVED WITH ANY ACTIVITY WITHIN THE VICINITY OF THESE ELECTRIC LINES MUST BE AWARE AND REMAIN AWARE OF THE HAZARDS OF WORKING AROUND THESE ELECTRIC LINES, INCLUDING MAINTAINING PROPER SAFETY CLEARANCES FROM THESE ELECTRIC LINES.

0 30
FEET

MARK	REVISION	DATE	BY
2	REVISED PER CITY COMMENTS	4-26-19	AWS
1	REVISED PER CITY COMMENTS	4-05-19	AWS

Engineer: CDD | Checked By: BKC | Scale: 1" = SCALE
Technician: AWS | Date: 03-01-2019 | Field Bk: | Pg:

118.0994

Sheet 6 of 21

ANKENY, IOWA

ASI INDUSTRIAL PARK PLAT 1, LOT 1

DIMENSION & UTILITY PLAN

SNYDER & ASSOCIATES, INC.
2727 S.W. SNYDER BLVD.
ANKENY, IOWA 50023
515-964-2020 | www.snyder-associates.com

SNYDER & ASSOCIATES

118.0994
Sheet 6 of 21

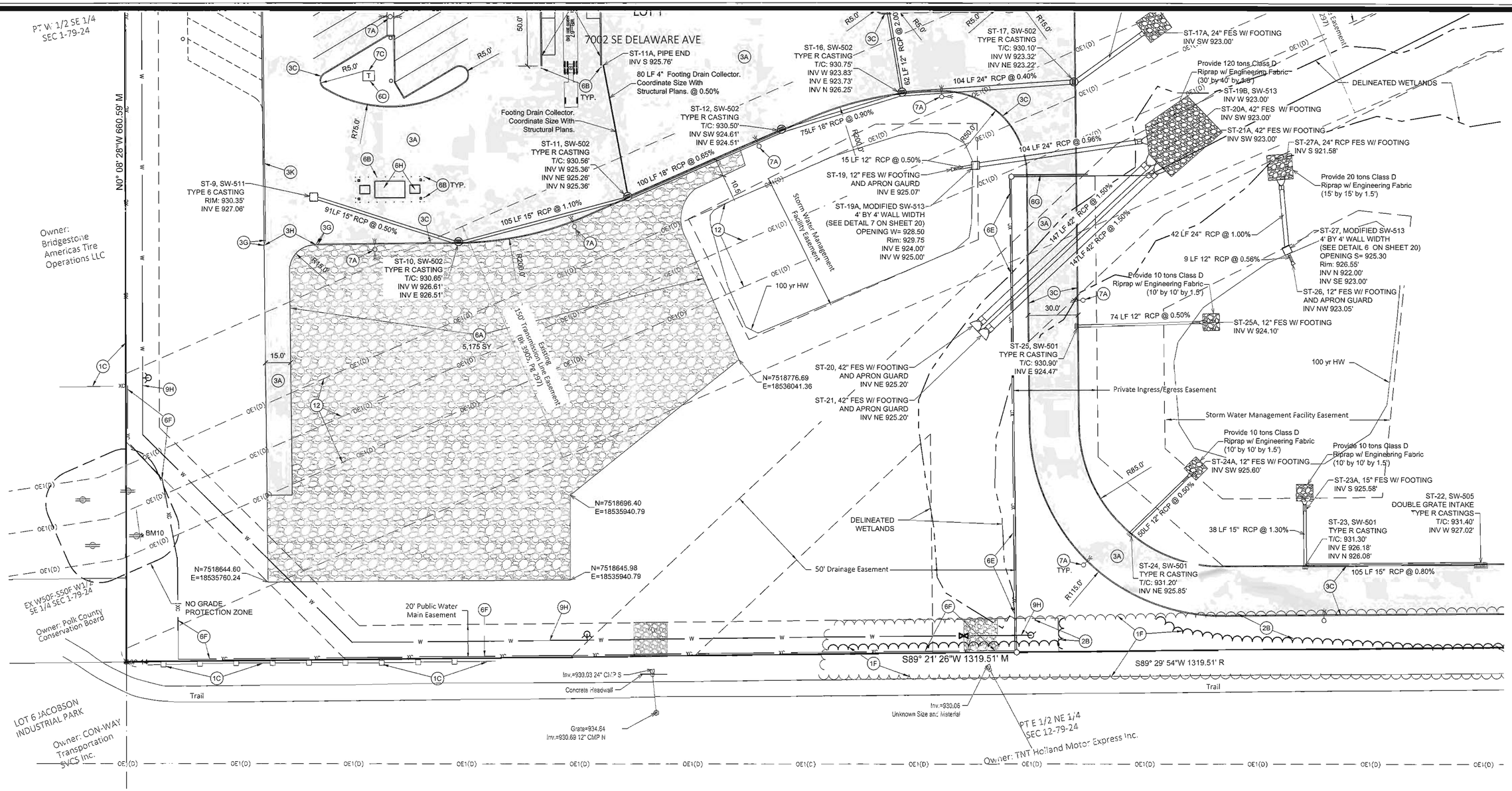

DIMENSION & UTILITY PLAN NOTES

1. EXISTING FEATURES, PROTECT THE FOLLOWING:
   A. EXISTING PAVEMENT.
   B. EXISTING UTILITIES. COORDINATE ANY RELOCATIONS OR ADJUSTMENTS WITH THE UTILITY SERVICE PROVIDER AS NECESSARY.
   C. EXISTING FENCE.
   D. REMOVE AND RELOCATE EXISTING BIKE TRAIL SIGN . COORDINATE WITH CITY OF ANKENY AND POLK COUNTY.
   E. BIKE ROUTE/NO MOTOR VEHICLES SIGNS.
   F. EXISTING TREES.
2. DEMOLITION, REMOVE THE FOLLOWING:
   A. REMOVE EXISTING 42" FES.
   B. REMOVE EXISTING TREES INCLUDING STUMPS AND ROOT SYSTEM TO A MINIMUM 24" DEPTH.
   C. 15" CMP CULVERT.
3. PAVEMENTS, PROVIDE THE FOLLOWING:
   A. DRIVES AND PARKING, 8" PCC WITH CD JOINTS AND 12" DEPTH PREPARED SUBGRADE COMPACTED TO 95% STANDARD PROCTOR DENSITY.
   B. FULL DEPTH SAWCUT TO A CLEAN VERTICAL EDGE AND CONNECT TO EXISTING PAVEMENT WITH SUDAS TYPE "A" CONNECTION (2030.101). MATCH EXISTING ELEVATIONS.
   C. 6" STANDARD CURB. SEE DETAIL
   D. INTEGRAL CURB AND SIDEWALK. SEE DETAIL.
   E. 4" DEPTH PCC SIDEWALK.
   F. PEDESTRIAN RAMPS WITH 8.3% MAXIMUM LONGITUDINAL SLOPE AND DETECTABLE WARNINGS PER ADAAG REQUIREMENTS WHERE SHOWN.
   G. TAPER CURB.
   H. 30' WIDE CURB OPENING TO GRANULAR SURFACE (TRUCK ENTRANCE).
   I. DRIVES AND PARKING, 6" PCC WITH 12" DEPTH PREPARED SUBGRADE COMPACTED TO 95% STANDARD PROCTOR DENSITY.
   J. 6" DEPTH PCC TRAIL. SEE PLAN FOR WIDTHS.
   K. 3" ROLLED CURB. SEE DETAIL.
   L. PROVIDE 3' WIDE CURB OPENING FOR TEMPORARY OVERFLOW.
4. PAVEMENT MARKINGS, PROVIDE THE FOLLOWING:
   A. 4" WIDE PAINTED PARKING STALL LINES.
   B. PAINTED STATE OF IOWA APPROVED ACCESSIBLE PARKING SYMBOL.
   C. ACCESSIBLE AISLE. 45° STRIPING AT 3' ON CENTER SPACING WHERE SHOWN.
   D. 45° STRIPING AT 3' ON CENTER SPACING WHERE SHOWN.
5. SIGNS, PROVIDE THE FOLLOWING:
   A. PROVIDE VAN ACCESSIBLE PARKING SIGNAGE AS PER ADAAG REQUIREMENTS.
6. PROVIDE THE FOLLOWING SITE IMPROVEMENTS WHERE SHOWN ON PLAN.
   A. 7" DEPTH GRANULAR SURFACING AREA FOR ROLL-OFF DUMPSTERS. SEE DETAIL.
   B. BOLLARDS.
   C. DETACHED LOADING DOCK WITH DOCK PLATE AND MINIMUM 36" HIGH PCC BARRIER WALLS, GALVANIZED TUBULAR SAFETY RAILING AND DETACHABLE SAFETY CHAIN WHEN REQUIRED BY OWNER. SEE STRUCTURAL PLAN. SEE OWNER'S PLAN.
   D. TRANSFORMER PAD. COORDINATE SIZE AND LOCATION WITH MID-AMERICAN ENERGY AND MECHANICAL PLANS.
   E. 6' OPAQUE FENCE.
   F. 8' CHAIN LINK FENCE.
   G. SLIDING GATE.
   H. 12,000 GALLON DUAL WALL FUELING STATION WITH PCC FOOTING. SEE OWNER'S PLANS.
   I. GENERATOR WITH PCC PAD. SEE MECHANICAL PLANS.
7. SITE LIGHTING, PROVIDE THE FOLLOWING:
   A. STREET LIGHT. SEE TESDELL LIGHTING PLAN.
   B. WALL MOUNTED LIGHT. SEE TESDELL LIGHTING PLAN.
   C. CONTRACTOR TO COORDINATE WITH THE UTILITY OWNER AND PROPERTY OWNER ALL ASPECTS OF ELECTRICAL SERVICE.
   D. BLOCK HEATER RECEPTACLES. SEE TESDELL LIGHTING PLANS.
8. PRIVATE SANITARY SEWER SERVICE, PROVIDE AND INSTALL THE FOLLOWING:
   A. CONNECT TO EXISTING SANITARY SEWER MAIN WITH MANUFACTURED WYE. VERIFY LOCATION AND ELEVATION PRIOR TO CONSTRUCTION.
   B. 6" PVC SANITARY SEWER SERVICE LINE AT A MINIMUM 1.0% SLOPE (1/8" PER FOOT). PROVIDE 1:1 RISER AS NECESSARY.
   C. COORDINATE THE EXACT LOCATION AND DEPTH WHERE SANITARY SEWER SERVICE LINE ENTERS THE BUILDING WITH THE ARCHITECTURAL AND MECHANICAL PLANS PRIOR TO CONSTRUCTION.
   D. SAND AND OIL SEPARATOR. SEE MECHANICAL PLANS.
   E. 6" WYE.
   F. SANITARY MANHOLE.
   G. SANITARY CLEANOUT.
   H. PROVIDE 1:1 RISER AS NECESSARY TO MEET INVERT ELEVATIONS.
9. WATER SERVICE FROM CITY OF ANKENY, PROVIDE THE FOLLOWING AS PER CITY REQUIREMENTS AND GUIDELINES:
   A. 6" WATER SERVICE LINE. THE SERVICE LINE TO THE RW VALVE IS A PART OF ASI INDUSTRIAL PARK PLAT 1 PUBLIC IMPROVEMENTS.
   B. 2" DOMESTIC WATER SERVICE LINE.
   C. 6" HYDRANT ASSEMBLY.
   D. 2" VALVE. CURB STOP TO BE ENCASED IN CONCRETE.
   E. COORDINATE THE EXACT LOCATION, SIZE AND ELEVATION WHERE WATER SERVICE LINE ENTERS THE BUILDING WITH THE ARCHITECTURAL AND MECHANICAL PLANS PRIOR TO CONSTRUCTION.
   F. 45° BEND.
   G. REMOTE 4" FIRE DEPARTMENT CONNECTION. FIRE PROTECTION CONTRACTOR TO VERIFY SIZE WITH THEIR HYDRAULIC CALCULATIONS FOR THE BUILDING. SEE MECHANICAL PLANS.
   H. 8" PUBLIC WATER MAIN. REFER TO ASI INDUSTRIAL PARK PLAT 1 CONSTRUCTION DRAWINGS FOR ADDITIONAL INFORMATION.
10. CONTRACTOR TO MAINTAIN 18" MINIMUM SEPARATION BETWEEN UTILITIES. VERIFY SEPARATION PRIOR TO CONSTRUCTION.
11. BUILDING DOWNSPOUT LOCATION. VERIFY WITH ARCHITECTURAL PLANS. CONTRACTOR TO COORDINATE DOWNSPOUT CONNECTION PRIOR TO CONSTRUCTION.
12. PLEASE NOTE THAT THESE ELECTRIC LINES ARE CONTINUOUSLY ENERGIZED. THE CONDUCTORS ON THESE ELECTRIC LINES ARE BARE AND UNINSULATED AND CONTACT WITH THESE ELECTRIC LINES CAN CAUSE SERIOUS INJURY OR DEATH. ALL PEOPLE INVOLVED WITH ANY ACTIVITY WITHIN THE VICINITY OF THESE ELECTRIC LINES MUST BE AWARE AND REMAIN AWARE OF THE HAZARDS OF WORKING AROUND THESE ELECTRIC LINES, INCLUDING MAINTAINING PROPER SAFETY CLEARANCES FROM THESE ELECTRIC LINES.

N

0 30
FEET

MARK	REVISION	DATE	BY
2	REVISED PER CITY COMMENTS	4-26-19	AWS
1	REVISED PER CITY COMMENTS	4-05-19	AWS

Engineer: CDD | Checked By: BKC | Scale: 1" = 30'
Technician: AWS | Date: 03-01-2019 | Field Bk: Pg:

118.0994

Sheet 7 of 21

ANKENY, IOWA

ASI INDUSTRIAL PARK PLAT 1, LOT 1

DIMENSION & UTILITY PLAN

SNYDER & ASSOCIATES, INC.
2727 S.W. SNYDER BLVD.
ANKENY, IOWA 50023
515-964-2020 | www.snyder-associates.com

SNYDER & ASSOCIATES

118.0994

Sheet 7 of 21

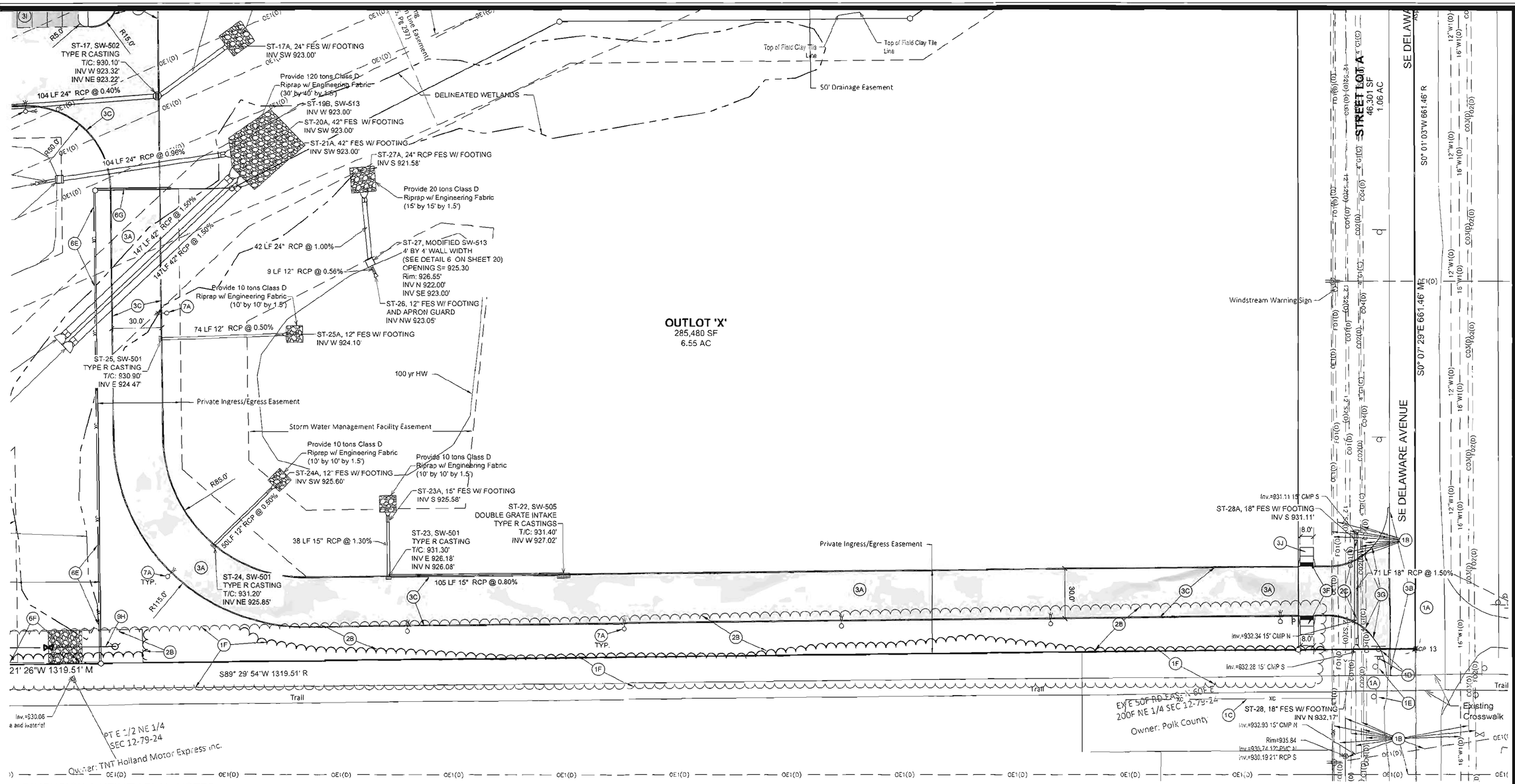

DIMENSION & UTILITY PLAN NOTES

1. EXISTING FEATURES, PROTECT THE FOLLOWING:
   A. EXISTING PAVEMENT.
   B. EXISTING UTILITIES. COORDINATE ANY RELOCATIONS OR ADJUSTMENTS WITH THE UTILITY SERVICE PROVIDER AS NECESSARY.
   C. EXISTING FENCE.
   D. REMOVE AND RELOCATE EXISTING BIKE TRAIL SIGN . COORDINATE WITH CITY OF ANKENY AND POLK COUNTY.
   E. BIKE ROUTE/NO MOTOR VEHICLES SIGNS.
   F. EXISTING TREES.
2. DEMOLITION, REMOVE THE FOLLOWING:
   A. REMOVE EXISTING 42" FES.
   B. REMOVE EXISTING TREES INCLUDING STUMPS AND ROOT SYSTEM TO A MINIMUM 24" DEPTH.
   C. 15" CMP CULVERT.
3. PAVEMENTS, PROVIDE THE FOLLOWING:
   A. DRIVES AND PARKING, 6" PCC WITH CD JOINTS AND 12" DEPTH PREPARED SUBGRADE COMPACTED TO 95% STANDARD PROCTOR DENSITY.
   B. FULL DEPTH SAWCUT TO A CLEAN VERTICAL EDGE AND CONNECT TO EXISTING PAVEMENT WITH SUDAS TYPE "A" CONNECTION (2030.101). MATCH EXISTING ELEVATIONS.
   C. 6" STANDARD CURB. SEE DETAIL
   D. INTEGRAL CURB AND SIDEWALK. SEE DETAIL.
   E. 4" DEPTH PCC SIDEWALK.
   F. PEDESTRIAN RAMPS WITH 8.3% MAXIMUM LONGITUDINAL SLOPE AND DETECTABLE WARNINGS PER ADAAG REQUIREMENTS WHERE SHOWN.
   G. TAPER CURB.
   H. 30' WIDE CURB OPENING TO GRANULAR SURFACE (TRUCK ENTRANCE).
   I. DRIVES AND PARKING, 6" PCC WITH 12" DEPTH PREPARED SUBGRADE COMPACTED TO 95% STANDARD PROCTOR DENSITY.
   J. 6" DEPTH PCC TRAIL. SEE PLAN FOR WIDTHS.
   K. 3" ROLLED CURB. SEE DETAIL
   L. PROVIDE 3' WIDE CURB OPENING FOR TEMPORARY OVERFLOW.
4. PAVEMENT MARKINGS, PROVIDE THE FOLLOWING:
   A. 4" WIDE PAINTED PARKING STALL LINES.
   B. PAINTED STATE OF IOWA APPROVED ACCESSIBLE PARKING SYMBOL.
   C. ACCESSIBLE AISLE. 45° STRIPING AT 3' ON CENTER SPACING WHERE SHOWN.
   D. 45° STRIPING AT 3' ON CENTER SPACING WHERE SHOWN.
5. SIGNS, PROVIDE THE FOLLOWING:
   A. PROVIDE VAN ACCESSIBLE PARKING SIGNAGE AS PER ADAAG REQUIREMENTS.
6. PROVIDE THE FOLLOWING SITE IMPROVEMENTS WHERE SHOWN ON PLAN.
   A. 7' DEPTH GRANULAR SURFACING AREA FOR ROLL-OFF DUMPSTERS. SEE DETAIL.
   B. BOLLARDS.
   C. DETACHED LOADING DOCK WITH DOCK PLATE AND MINIMUM 36" HIGH PCC BARRIER WALLS, GALVANIZED TUBULAR SAFETY RAILING AND DETACHABLE SAFETY CHAIN WHEN REQUIRED BY OWNER. SEE STRUCTURAL PLAN. SEE OWNER'S PLAN.
   D. TRANSFORMER PAD. COORDINATE SIZE AND LOCATION WITH MID-AMERICAN ENERGY AND MECHANICAL PLANS.
   E. 6' OPAQUE FENCE.
   F. 6' CHAIN LINK FENCE
   G. SLIDING GATE.
   H. 12,000 GALLON DUAL WALL FUELING STATION WITH PCC FOOTING. SEE OWNER'S PLANS.
   I. GENERATOR WITH PCC PAD. SEE MECHANICAL PLANS.
7. SITE LIGHTING, PROVIDE THE FOLLOWING:
   A. STREET LIGHT. SEE TESDELL LIGHTING PLAN.
   B. WALL MOUNTED LIGHT. SEE TESDELL LIGHTING PLAN.
   C. CONTRACTOR TO COORDINATE WITH THE UTILITY OWNER AND PROPERTY OWNER ALL ASPECTS OF ELECTRICAL SERVICE.
   D. BLOCK HEATER RECEPTACLES. SEE TESDELL LIGHTING PLANS.
8. PRIVATE SANITARY SEWER SERVICE, PROVIDE AND INSTALL THE FOLLOWING:
   A. CONNECT TO EXISTING SANITARY SEWER MAIN WITH MANUFACTURED WYE. VERIFY LOCATION AND ELEVATION PRIOR TO CONSTRUCTION.
   B. 6" PVC SANITARY SEWER SERVICE LINE AT A MINIMUM 1.0% SLOPE (1/8" PER FOOT). PROVIDE 1:1 RISER AS NECESSARY.
   C. COORDINATE THE EXACT LOCATION AND DEPTH WHERE SANITARY SEWER SERVICE LINE ENTERS THE BUILDING WITH THE ARCHITECTURAL AND MECHANICAL PLANS PRIOR TO CONSTRUCTION.
   D. SAND AND OIL SEPARATOR. SEE MECHANICAL PLANS.
   E. 6" WYE.
   F. SANITARY MANHOLE.
   G. SANITARY CLEANOUT.
   H. PROVIDE 1:1 RISER AS NECESSARY TO MEET INVERT ELEVATIONS.
9. WATER SERVICE FROM CITY OF ANKENY, PROVIDE THE FOLLOWING AS PER CITY REQUIREMENTS AND GUIDELINES:
   A. 6" WATER SERVICE LINE. THE SERVICE LINE TO THE RW VALVE IS A PART OF ASI INDUSTRIAL PARK PLAT 1 PUBLIC IMPROVEMENTS.
   B. 2" DOMESTIC WATER SERVICE LINE.
   C. 6" HYDRANT ASSEMBLY.
   D. 2" VALVE. CURB STOP TO BE ENCASED IN CONCRETE.
   E. COORDINATE THE EXACT LOCATION, SIZE AND ELEVATION WHERE WATER SERVICE LINE ENTERS THE BUILDING WITH THE ARCHITECTURAL AND MECHANICAL PLANS PRIOR TO CONSTRUCTION
   F. 45° BEND.
   G. REMOTE 4" FIRE DEPARTMENT CONNECTION. FIRE PROTECTION CONTRACTOR TO VERIFY SIZE WITH THEIR HYDRAULIC CALCULATIONS FOR THE BUILDING. SEE MECHANICAL PLANS.
   H. 8" PUBLIC WATER MAIN. REFER TO ASI INDUSTRIAL PARK PLAT 1 CONSTRUCTION DRAWINGS FOR ADDITIONAL INFORMATION.
10. CONTRACTOR TO MAINTAIN 18" MINIMUM SEPARATION BETWEEN UTILITIES. VERIFY SEPARATION PRIOR TO CONSTRUCTION.
11. BUILDING DOWNSPOUT LOCATION. VERIFY WITH ARCHITECTURAL PLANS. CONTRACTOR TO COORDINATE DOWNSPOUT CONNECTION PRIOR TO CONSTRUCTION.
12. PLEASE NOTE THAT THESE ELECTRIC LINES ARE CONTINUOUSLY ENERGIZED. THE CONDUCTORS ON THESE ELECTRIC LINES ARE BARE AND UNINSULATED AND CONTACT WITH THESE ELECTRIC LINES CAN CAUSE SERIOUS INJURY OR DEATH. ALL PEOPLE INVOLVED WITH ANY ACTIVITY WITHIN THE VICINITY OF THESE ELECTRIC LINES MUST BE AWARE AND REMAIN AWARE OF THE HAZARDS OF WORKING AROUND THESE ELECTRIC LINES, INCLUDING MAINTAINING PROPER SAFETY CLEARANCES FROM THESE ELECTRIC LINES.

MARK	REVISION	DATE	BY
2	REVISED PER CITY COMMENTS	4-26-19	AWS
1	REVISED PER CITY COMMENTS	4-05-19	AWS

Engineer: CDD | Checked By: BKC | Scale: 1" = SCALE
Technician: AWS | Date: 03-01-2019 | Field Bk: Pg:
118.0994

Sheet 8 of 21

ASI INDUSTRIAL PARK PLAT 1, LOT 1

DIMENSION & UTILITY PLAN

ANKENY, IOWA

SNYDER & ASSOCIATES, INC.
2727 S.W. SNYDER BLVD.
ANKENY, IOWA 50023
515-964-2020 | www.snyder-associates.com

SNYDER & ASSOCIATES

118.0994

Sheet 8 of 21

GRADING NOTES

1. CONTRACTOR TO STRIP AND STOCKPILE TOPSOIL ON ALL AREAS TO BE CUT OR FILLED. RESPREAD TO MINIMUM 6" DEPTH TO FINISH GRADES.
2. ANY EXCESS CUT TO BE SPREAD ON SITE AS DIRECTED BY ENGINEER DURING CONSTRUCTION. PLACE TOPSOIL OVER ALL AREAS DISTURBED.
3. ALL DRAINAGE SWALES AND SLOPES 5 TO 1 OR GREATER TO BE SEEDED USING COMMERCIALLY AVAILABLE EROSION CONTROL SEED. MIXTURE APPLIED AT RATE RECOMMENDED BY SUPPLIER.
4. EROSION CONTROL: SEED THE SITE AFTER ROUGH GRADING HAS BEEN COMPLETED. PLACE SILT FENCE AND MAINTAIN IN PROBLEM AREAS AFTER GROUND COVER HAS BEEN ESTABLISHED. COMPLY WITH EROSION CONTROL LAW.
5. PROVIDE BELOW GRADE INLET PROTECTION IN PAVED AREAS FOLLOWING PAVING OPERATIONS.

QUANTITIES

SEEDING AND MULCHING	14 AC.
SILT FENCE	3243 LF.
BELOW GRADE INLET PROTECTION	16 EA.

BENCHMARKS

NORTH AMERICAN VERTICAL DATUM OF 1988 (NAVD88 - GEOID12A)
IARTN DERIVED - US SURVEY FEET

BM10 ELEV=942.76
CUT "X" ON EAST SIDE OF CONCRETE COLUMN, SOUTHEAST LEG OF OVERHEAD TRANSMISSION LINE, SOUTHWEST CORNER OF SITE. (AS SHOWN ON SURVEY)

BM11 ELEV=924.06
CUT "X" ON WEST SIDE OF CONCRETE COULMN, NORTHWEST LEG OF OVERHEAD TRANSMISSION LINE, MIDDLE OF SITE. (AS SHOWN ON SURVEY)

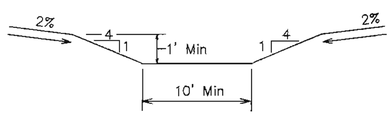

TYPICAL DRAINAGE SWALE
SECTION A-A

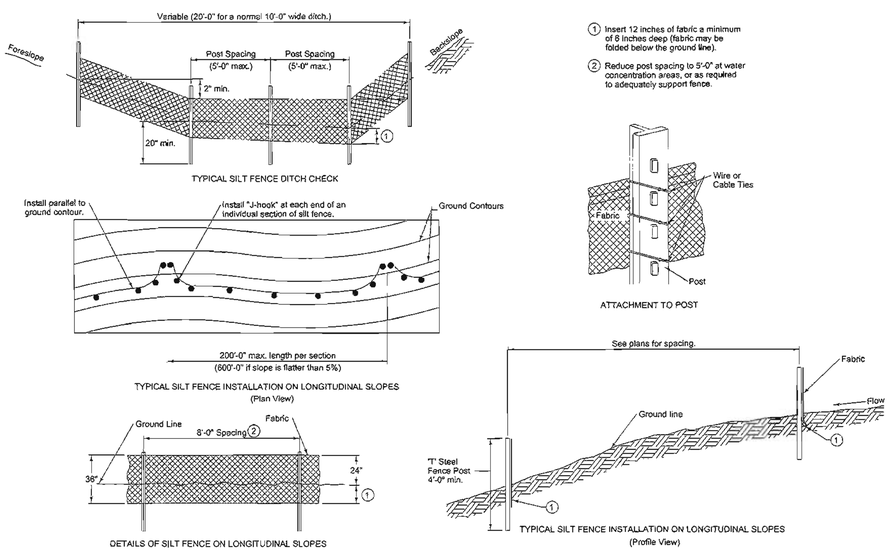

SILT FENCE

POLLUTION PREVENTION NOTES

A. POLLUTION PREVENTION AND EROSION PROTECTION

1. CODE COMPLIANCE: THE CONTRACTOR IS RESPONSIBLE FOR COMPLIANCE WITH ALL POTENTIAL POLLUTION AND SOIL EROSION CONTROL REQUIREMENTS OF THE IOWA CODE, THE IOWA DEPARTMENT OF NATURAL RESOURCES (IDNR) NPDES PERMIT, THE U.S. CLEAN WATER ACT AND ANY LOCAL ORDINANCES. THE CONTRACTOR SHALL TAKE ALL NECESSARY STEPS TO PROTECT AGAINST EROSION AND POLLUTION FROM THIS PROJECT SITE AND ALL OFF-SITE BORROW OR DEPOSIT AREAS DURING PERFORMANCE OR AS A RESULT OF PERFORMANCE.
2. DAMAGE CLAIMS: THE CONTRACTOR WILL HOLD THE OWNER AND ARCHITECT / ENGINEER HARMLESS FROM ANY AND ALL CLAIMS OF ANY TYPE WHATSOEVER RESULTING FROM DAMAGES TO ADJOINING PUBLIC OR PRIVATE PROPERTY, INCLUDING REASONABLE ATTORNEY FEES INCURRED TO OWNER. FURTHER, IF THE CONTRACTOR FAILS TO TAKE NECESSARY STEPS TO PROMPTLY REMOVE EARTH SEDIMENTATION OR DEBRIS WHICH COMES ONTO ADJOINING PUBLIC OR PRIVATE PROPERTY, THE OWNER MAY, BUT NEED NOT, REMOVE SUCH ITEMS AND DEDUCT THE COST THEREOF FROM AMOUNTS DUE TO THE CONTRACTOR.

B. STORM WATER DISCHARGE PERMIT

1. THIS PROJECT REQUIRES COVERAGE UNDER THE NPDES GENERAL PERMIT NO. 2 FOR STORM WATER DISCHARGES ASSOCIATED WITH CONSTRUCTION ACTIVITIES FROM THE IDNR, AS REQUIRED BY THE ENVIRONMENTAL PROTECTION AGENCY (EPA). THE GENERAL CONTRACTOR AND ALL SUBCONTRACTORS ARE RESPONSIBLE FOR COMPLIANCE WITH AND FULFILLMENT OF ALL REQUIREMENTS OF THE NPDES GENERAL PERMIT NO. 2 AS SPECIFIED IN THE CONTRACT DOCUMENTS.
2. ALL DOCUMENTS RELATED TO THE STORM WATER DISCHARGE PERMIT, INCLUDING, BUT NOT LIMITED TO, THE NOTICE OF INTENT, PROOF OF PUBLICATIONS, DISCHARGE AUTHORIZATION LETTER, CURRENT SWPPP, SITE INSPECTION LOG, AND OTHER ITEMS, SHALL BE KEPT ON SITE AT ALL TIMES AND MUST BE PRESENTED TO ANY JURISDICTIONAL AGENCIES UPON REQUEST. FAILURE TO COMPLY WITH THE NPDES PERMIT REQUIREMENTS IS A VIOLATION OF THE CLEAN WATER ACT AND THE CODE OF IOWA.
3. A "NOTICE OF DISCONTINUATION" MUST BE FILED WITH THE IDNR UPON FINAL STABILIZATION OF THE DISTURBED SITE AND REMOVAL OF ALL TEMPORARY EROSION CONTROL MEASURES. ALL PLANS, INSPECTION REPORTS, AND OTHER DOCUMENTS MUST BE RETAINED FOR A PERIOD OF THREE YEARS AFTER PROJECT COMPLETION. THE CONTRACTOR SHALL RETAIN A RECORD COPY AND PROVIDE THE ORIGINAL DOCUMENTS TO THE OWNER UPON PROJECT ACCEPTANCE AND/OR SUBMITTAL OF THE NOTICE OF DISCONTINUATION.

C. POLLUTION PREVENTION PLAN

1. THE STORM WATER POLLUTION PREVENTION PLAN (SWPPP) IS A SEPARATE DOCUMENT IN ADDITION TO THESE PLAN DRAWINGS. THE CONTRACTOR SHOULD REFER TO THE SWPPP FOR ADDITIONAL REQUIREMENTS AND MODIFICATIONS TO THE POLLUTION PREVENTION PLAN MADE DURING CONSTRUCTION.
2. THE SWPPP ILLUSTRATES GENERAL MEASURES AND BEST MANAGEMENT PRACTICES (BMP) FOR COMPLIANCE WITH THE PROJECT'S NPDES PERMIT COVERAGE. ALL BMP'S AND EROSION CONTROL MEASURES REQUIRED AS A RESULT OF CONSTRUCTION ACTIVITIES ARE THE RESPONSIBILITY OF THE CONTRACTOR TO IDENTIFY, NOTE AND IMPLEMENT. ADDITIONAL BMP'S FROM THOSE SHOWN ON THE PLAN MAY BE REQUIRED.
3. THE SWPPP AND SITE MAP SHOULD BE EXPEDITIOUSLY REVISED TO REFLECT CONSTRUCTION PROGRESS AND CHANGES AT THE PROJECT SITE.
4. THE CONTRACTOR IS RESPONSIBLE FOR COMPLIANCE WITH ALL REQUIREMENTS OF THE GENERAL PERMIT AND SWPPP, INCLUDING, BUT NOT LIMITED TO, THE FOLLOWING BMP'S UNLESS INFEASIBLE OR NOT APPLICABLE:
   a. UTILIZE OUTLET STRUCTURES THAT WITHDRAW WATER FROM THE SURFACE WHEN DISCHARGING FROM BASINS, PROVIDE AND MAINTAIN NATURAL BUFFERS AROUND SURFACE WATERS, DIRECT STORM WATER TO VEGETATED AREAS TO INCREASE SEDIMENT REMOVAL AND MAXIMIZE STORM WATER INFILTRATION, AND MINIMIZE SOIL COMPACTION.
   b. INSTALL PERIMETER AND FINAL SEDIMENT CONTROL MEASURES SUCH AS SILT BARRIERS, DITCH CHECKS, DIVERSION BERMS, OR SEDIMENTATION BASINS DOWNSTREAM OF SOIL DISTURBING ACTIVITIES PRIOR TO SITE CLEARING AND GRADING OPERATIONS.
   c. PRESERVE EXISTING VEGETATION IN AREAS NOT NEEDED FOR CONSTRUCTION AND LIMIT TO A MINIMUM THE TOTAL AREA DISTURBED BY CONSTRUCTION OPERATIONS AT ANY TIME.
   d. MAINTAIN ALL TEMPORARY AND PERMANENT EROSION CONTROL MEASURES IN WORKING ORDER, INCLUDING CLEANING, REPAIRING, REPLACEMENT, AND SEDIMENT REMOVAL THROUGHOUT THE PERMIT PERIOD. CLEAN OR REPLACE SILT CONTROL DEVICES WHEN THE MEASURES HAVE LOST 50% OF THEIR ORIGINAL CAPACITY.
   e. INSPECT THE PROJECT AREA AND CONTROL DEVICES (BY QUALIFIED PERSONNEL ASSIGNED BY THE CONTRACTOR) EVERY SEVEN CALENDAR DAYS. RECORD THE FINDINGS OF THESE INSPECTIONS AND ANY RESULTING ACTIONS IN THE SWPPP WITH A COPY SUBMITTED WEEKLY TO THE OWNER OR ENGINEER DURING CONSTRUCTION. REVISE THE SWPPP AND IMPLEMENT ANY RECOMMENDED MEASURES WITHIN 7 DAYS.
   f. PREVENT ACCUMULATION OF EARTH AND DEBRIS FROM CONSTRUCTION ACTIVITIES ON ADJOINING PUBLIC OR PRIVATE PROPERTIES, INCLUDING STREETS, DRIVEWAYS, SIDEWALKS, DRAINAGEWAYS, OR UNDERGROUND SEWERS. REMOVE ANY ACCUMULATION OF EARTH OR DEBRIS IMMEDIATELY AND TAKE REMEDIAL ACTIONS FOR FUTURE PREVENTION.
   g. INSTALL NECESSARY CONTROL MEASURES SUCH AS SILT BARRIERS, EROSION CONTROL MATS, MULCH, DITCH CHECKS OR RIPRAP AS SOON AS AREAS REACH THEIR FINAL GRADES AND AS CONSTRUCTION OPERATIONS PROGRESS TO ENSURE CONTINUOUS RUNOFF CONTROL. PROVIDE INLET AND OUTLET CONTROL MEASURES AS SOON AS STORM SEWERS ARE INSTALLED.
   h. RESPREAD A MINIMUM OF 6 INCHES OF TOPSOIL (INCLUDING TOPSOIL FOUND IN SOD) ON ALL DISTURBED AREAS, EXCEPT WHERE PAVEMENT, BUILDINGS OR OTHER IMPROVEMENTS ARE LOCATED.
   i. STABILIZE UNDEVELOPED, DISTURBED AREAS WITH MULCH, TEMPORARY SEED MIX, PERMANENT SEED MIX, SOD, OR PAVEMENT IMMEDIATELY AS SOON AS POSSIBLE UPON COMPLETION OR DELAY OF GRADING OPERATIONS. INITIATE STABILIZATION MEASURES IMMEDIATELY AFTER CONSTRUCTION ACTIVITY IS FINALLY COMPLETED OR TEMPORARILY CEASED ON ANY PORTION OF THE SITE AND WHICH WILL NOT RESUME FOR A PERIOD EXCEEDING 14 CALENDAR DAYS.
   j. COORDINATE LOCATIONS OF STAGING AREAS WITH THE OWNER AND RECORD IN THE SWPPP. UNLESS NOTED OTHERWISE, STAGING AREAS SHOULD CONTAIN THE FOLLOWING: JOB TRAILERS, FUELING / VEHICLE MAINTENANCE AREA, TEMPORARY SANITARY FACILITIES, MATERIALS STORAGE, AND CONCRETE WASHOUT FACILITY. CONTROL RUNOFF FROM STAGING AREAS WITH DIVERSION BERMS AND/OR SILT BARRIERS AND DIRECT TO A SEDIMENT BASIN OR OTHER CONTROL DEVICE WHERE POSSIBLE. CONCRETE WASHOUT MUST BE CONTAINED ONSITE.
   k. REMOVE ALL TEMPORARY EROSION CONTROL MEASURES AND SITE WASTE PRIOR TO FILING OF THE "NOTICE OF DISCONTINUATION".

MARK	REVISION	DATE	BY
2	REVISED PER CITY COMMENTS	4-26-19	AWS
1	REVISED PER CITY COMMENTS	4-05-19	AWS

Engineer: CDD | Checked By: BKC | Scale: 1" = 1'
Technician: AWS | Date: 03-01-2019 | Field Bk: | Pg:
118.0994

Sheet 9 of 21

ASI INDUSTRIAL PARK PLAT 1, LOT 1

GRADING AND EROSION CONTROL NOTES & DETAILS

ANKENY, IOWA

SNYDER & ASSOCIATES, INC.
2727 S.W. SNYDER BLVD.
ANKENY, IOWA 50023
515-964-2020 | www.snyder-associates.com

SNYDER & ASSOCIATES

118.0994

Sheet 9 of 21

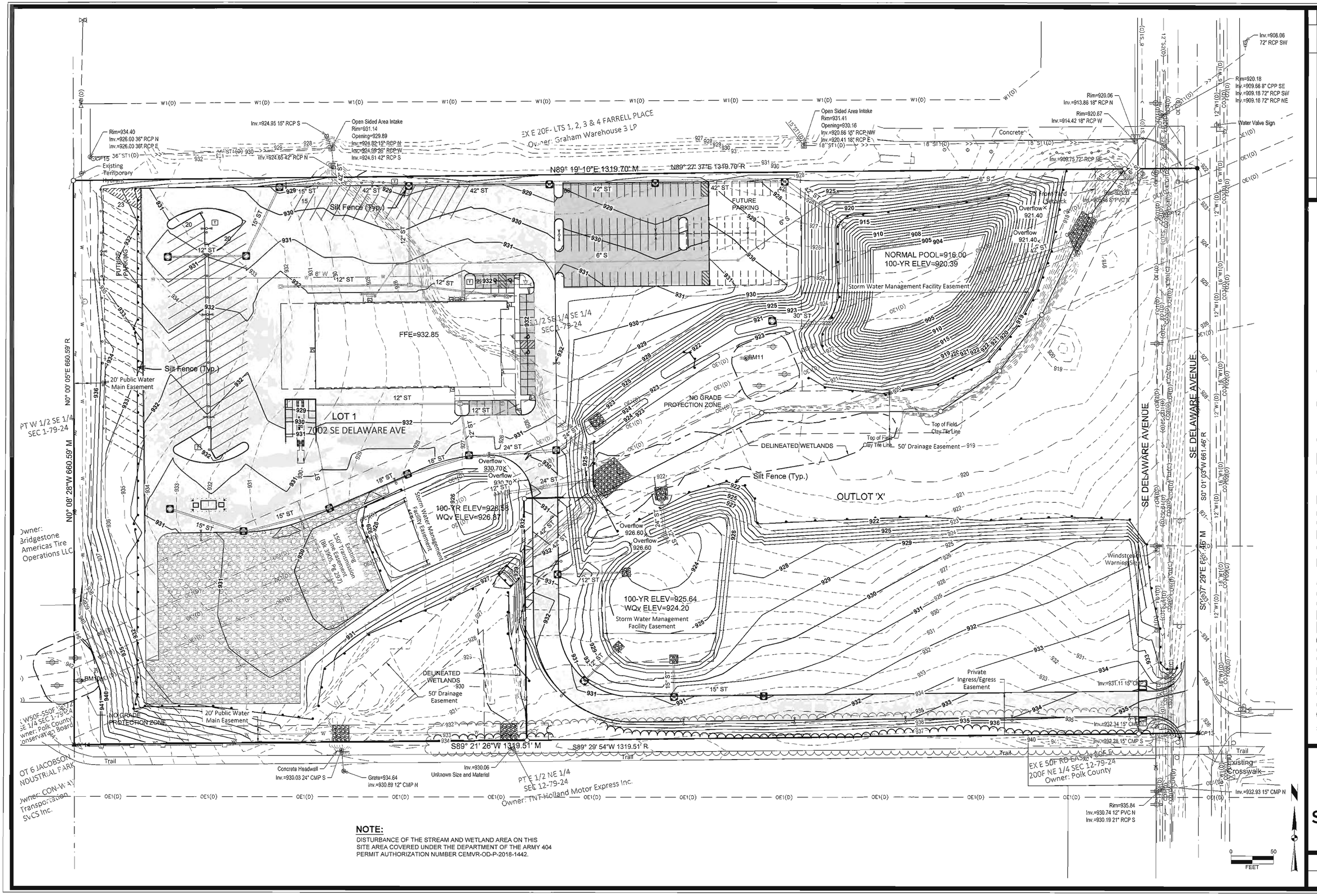

NOTE:

DISTURBANCE OF THE STREAM AND WETLAND AREA ON THIS SITE AREA COVERED UNDER THE DEPARTMENT OF THE ARMY 404 PERMIT AUTHORIZATION NUMBER CEMVR-OD-P-2018-1442.

MARK	REVISION	DATE	BY
2	REVISED PER CITY COMMENTS	4-26-19	AWS
1	REVISED PER CITY COMMENTS	4-05-19	AWS

Engineer: ENGR. Checked By: CHKD Scale: 1" = 50'
Technician: TECH Date: MM-DD-YYYY Field Bk: Pg:

118.0994

Sheet 10 of 21

ASI INDUSTRIAL PARK PLAT 1, LOT 1

OVERALL GRADING AND EROSION CONTROL PLAN

ANKENY, IOWA

SNYDER & ASSOCIATES, INC.
2727 S.W. SNYDER BLVD.
ANKENY, IOWA 50023
515-964-2020 | www.snyder-associates.com

SNYDER & ASSOCIATES

118.0994

Sheet 10 of 21

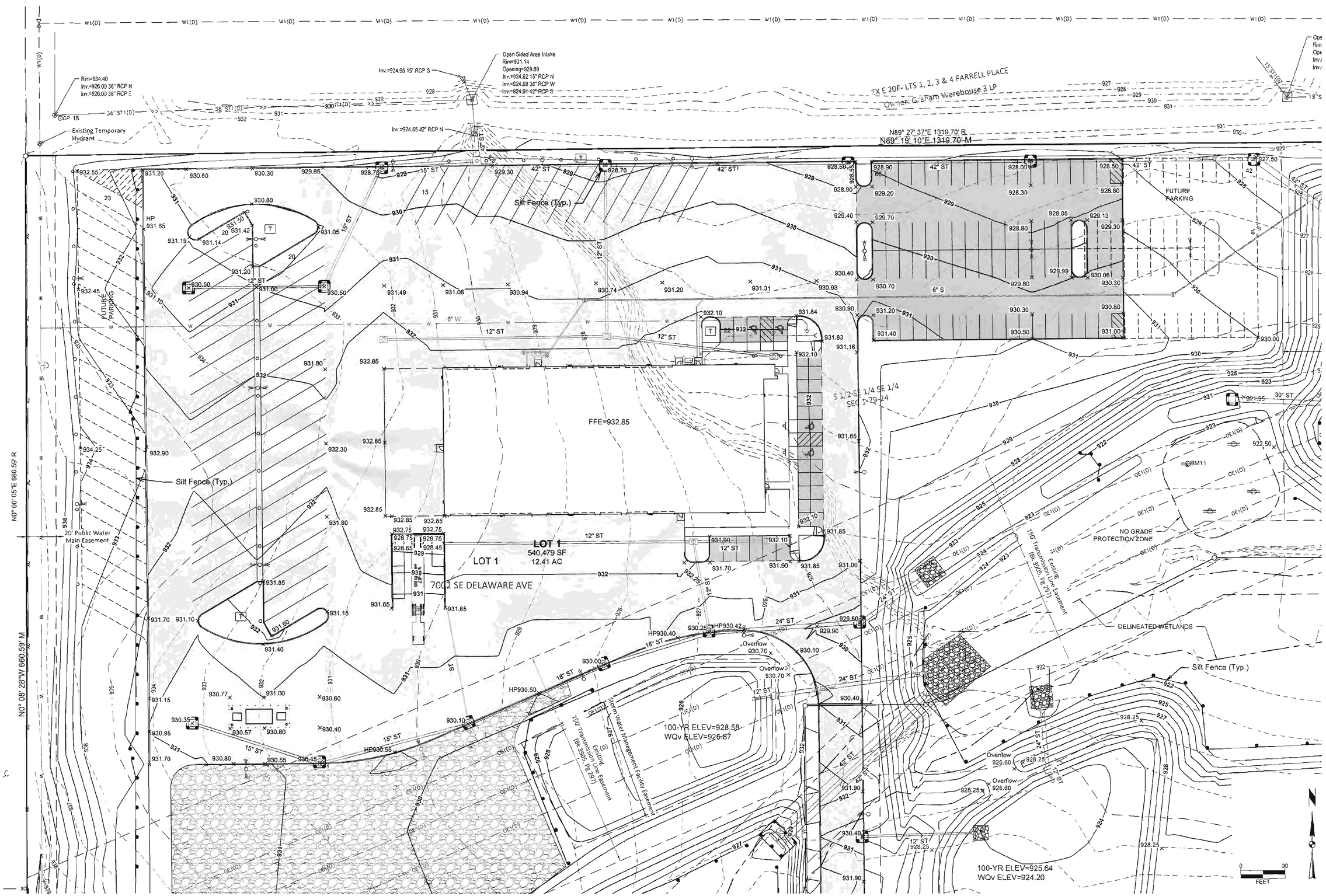

MARK	REVISION	DATE	BY
2	REVISED PER CITY COMMENTS	4-26-19	AWS
1	REVISED PER CITY COMMENTS	4-05-19	AWS

Engineer: CDD | Checked By: BKC | Scale: 1" = SCALE
Technician: AWS | Date: 03-01-2019 | Field Bk: | Pg:

118.0994

Sheet 11 of 21

ASI INDUSTRIAL PARK PLAT 1, LOT 1

ANKENY, IOWA

DETAILED GRADING PLAN

SNYDER & ASSOCIATES, INC.
2727 S.W. SNYDER BLVD.
ANKENY, IOWA 50023
515-964-2020 | www.snyder-associates.com

SNYDER & ASSOCIATES

118.0994

Sheet 11 of 21

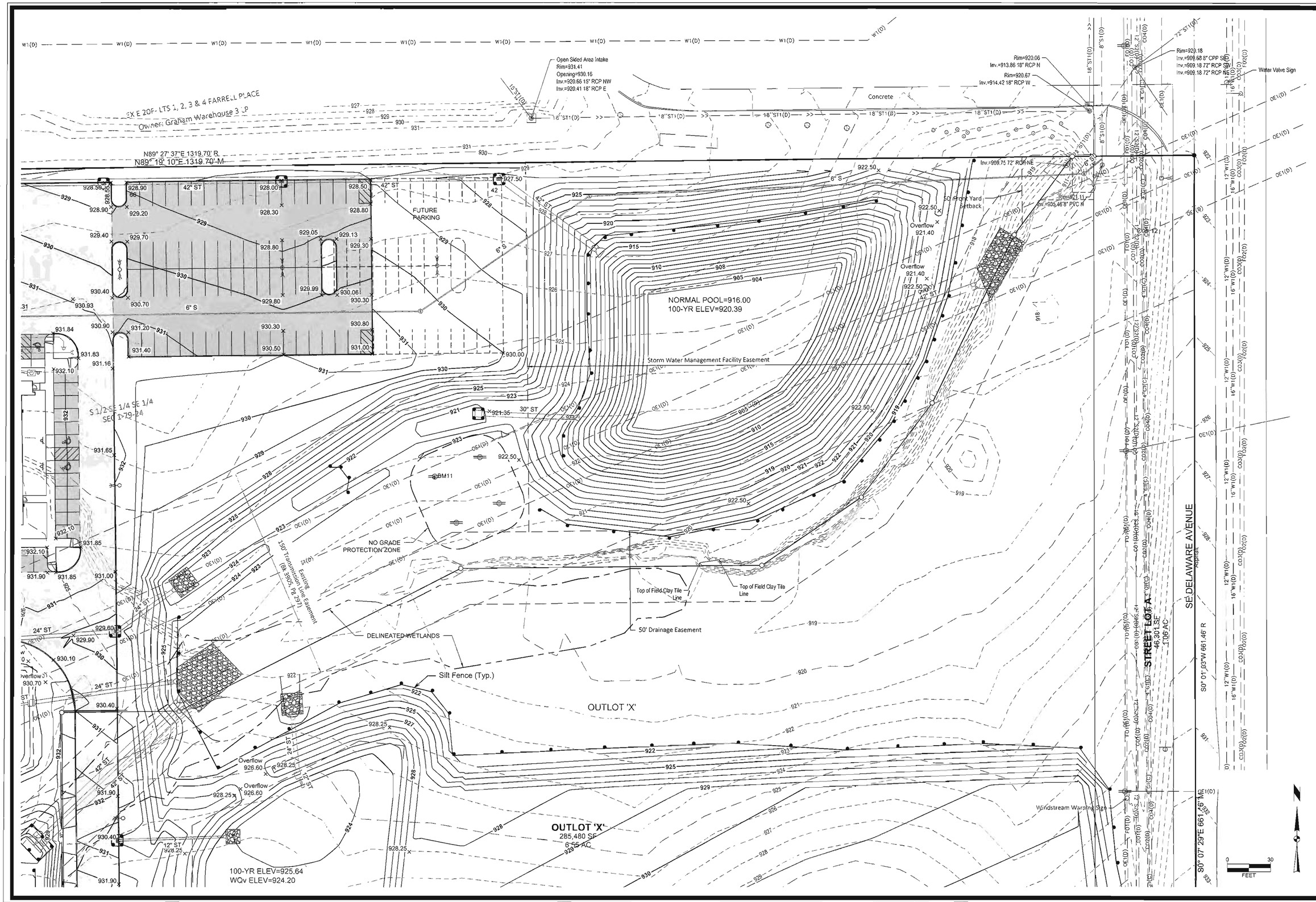

MARK	REVISION	DATE	BY
2	REVISED PER CITY COMMENTS	4-26-19	AWS
1	REVISED PER CITY COMMENTS	4-05-19	AWS

Engineer: CDD | Checked By: BKC | Scale: 1" = SCALE | Field Bk: | Pg:
Technician: AWS | Date: 03-01-2019

118.0994

Sheet 12 of 21

ASI INDUSTRIAL PARK PLAT 1, LOT 1

DETAILED GRADING PLAN

ANKENY, IOWA

SNYDER & ASSOCIATES, INC.
2727 S.W. SNYDER BLVD.
ANKENY, IOWA 50023
515-964-2020 | www.snyder-associates.com

SNYDER & ASSOCIATES

118.0994

Sheet 12 of 21

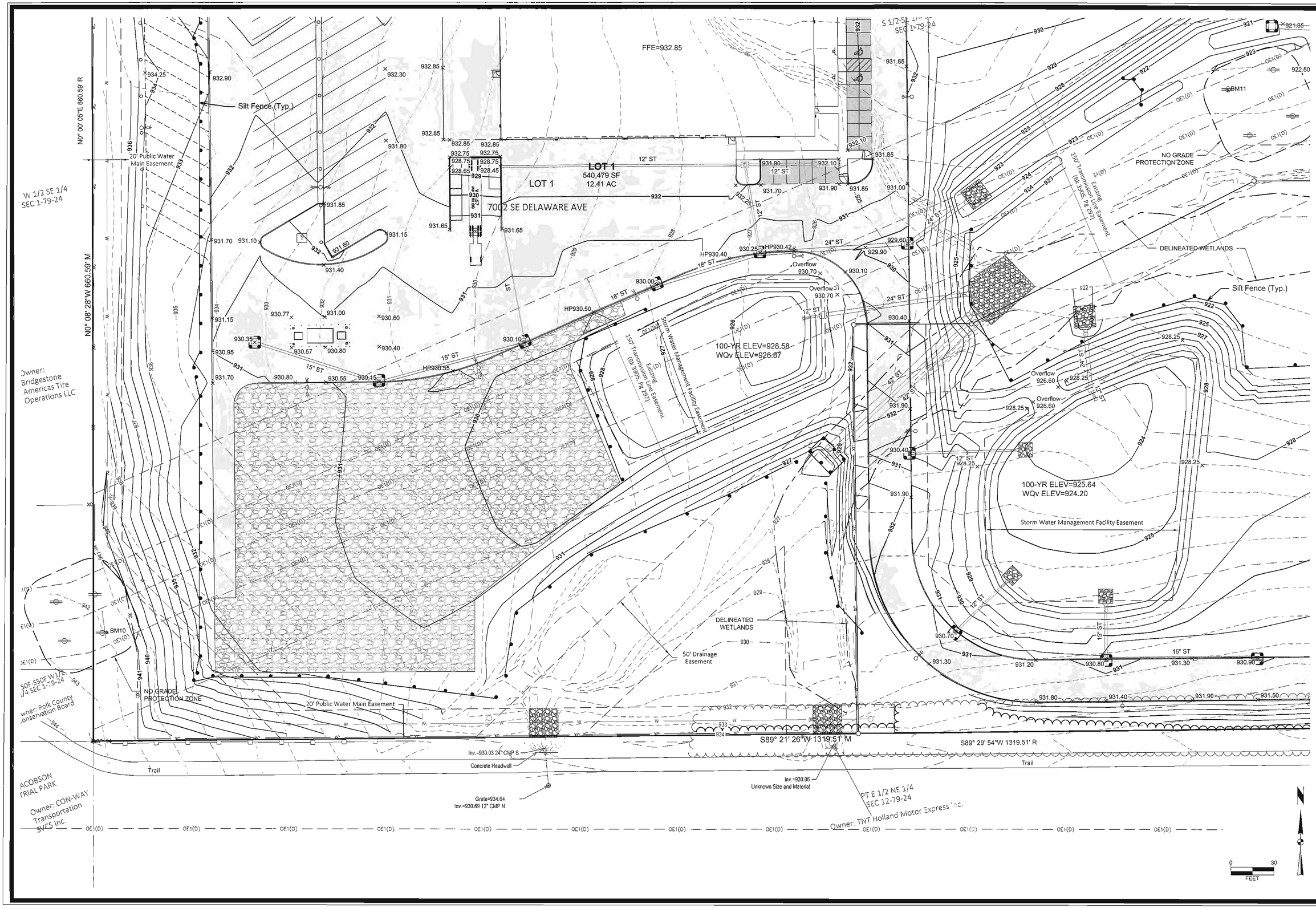

MARK	REVISION	DATE	BY
2	REVISED PER CITY COMMENTS	4-26-19	AWS
1	REVISED PER CITY COMMENTS	4-05-19	AWS

Engineer: CDD | Checked By: BKC | Scale: 1" = SCALE
Technician: AWS | Date: 03-01-2019 | Field Bk: | Pg:

118.0984

Sheet 13 of 21

ASI INDUSTRIAL PARK PLAT 1, LOT 1

DETAILED GRADING PLAN

ANKENY, IOWA

SNYDER & ASSOCIATES, INC.
2727 S.W. SNYDER BLVD.
ANKENY, IOWA 50023
515-964-2020 | www.snyder-associates.com

SNYDER & ASSOCIATES

118.0994

Sheet 13 of 21

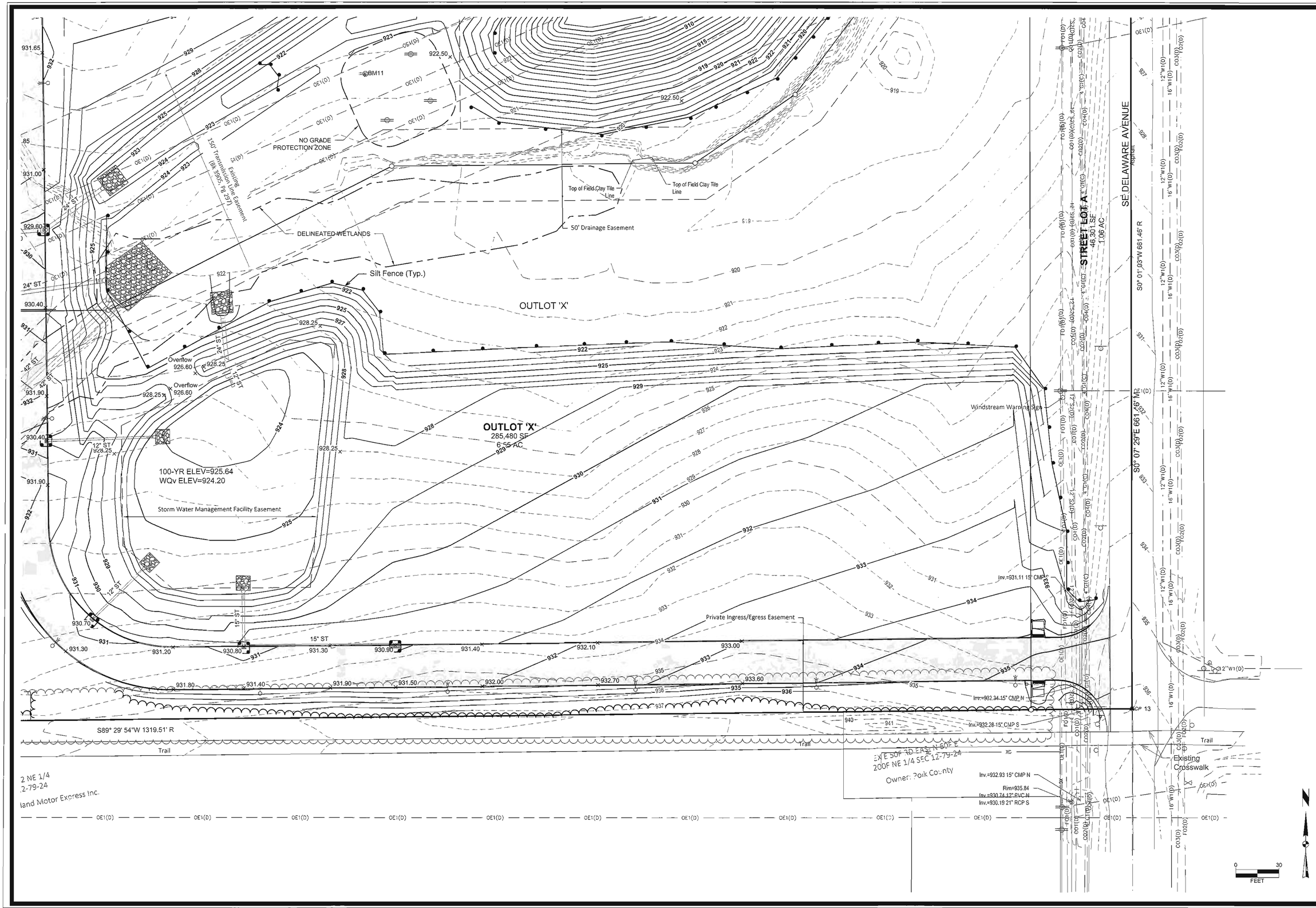

MARK	REVISION	DATE	BY
2	REVISED PER CITY COMMENTS	4-26-19	AWS
1	REVISED PER CITY COMMENTS	4-05-19	AWS

Engineer: CDD | Checked By: BKC | Scale: 1" = SCALE
Technician: AWS | Date: 03-01-2019 | Field Bk: Pg:
118.0994

Sheet 14 of 21

ASI INDUSTRIAL PARK PLAT 1, LOT 1

DETAILED GRADING PLAN

ANKENY, IOWA

SNYDER & ASSOCIATES, INC.

2727 S.W. SNYDER BLVD.
ANKENY, IOWA 50023
515-964-2020 | www.snyder-associates.com

SNYDER & ASSOCIATES

118.0994

Sheet 14 of 21

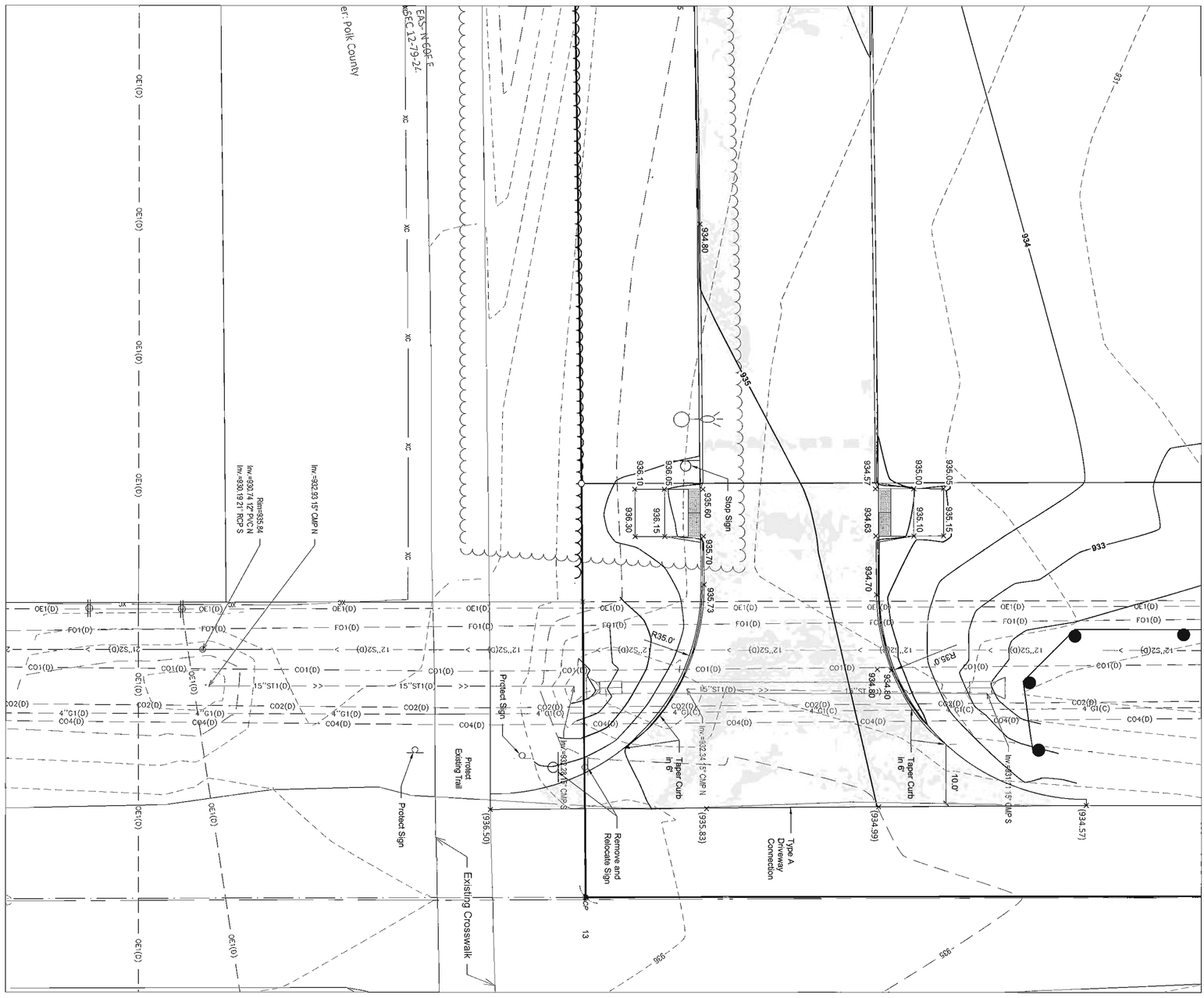

ASI INDUSTRIAL PARK PLAT 1, LOT 1

DETAILED GRADING PLAN

ANKENY, IOWA

MARK	REVISION	DATE	BY
2	REVISED PER CITY COMMENTS	4-26-19	AWS
1	REVISED PER CITY COMMENTS	4-05-19	AWS

Engineer: CDD	Checked By: BKC	Scale: 1" = 10'	
Technician: AWS	Date: 03-01-2019	Field Bk:	Pg:

118.0994

Sheet 15 of 21

SNYDER & ASSOCIATES

SNYDER & ASSOCIATES, INC.

2727 S.W. SNYDER BLVD.
ANKENY, IOWA 50023
515-964-2020 | www.snyder-associates.com

118.0994

Sheet 15 of 21

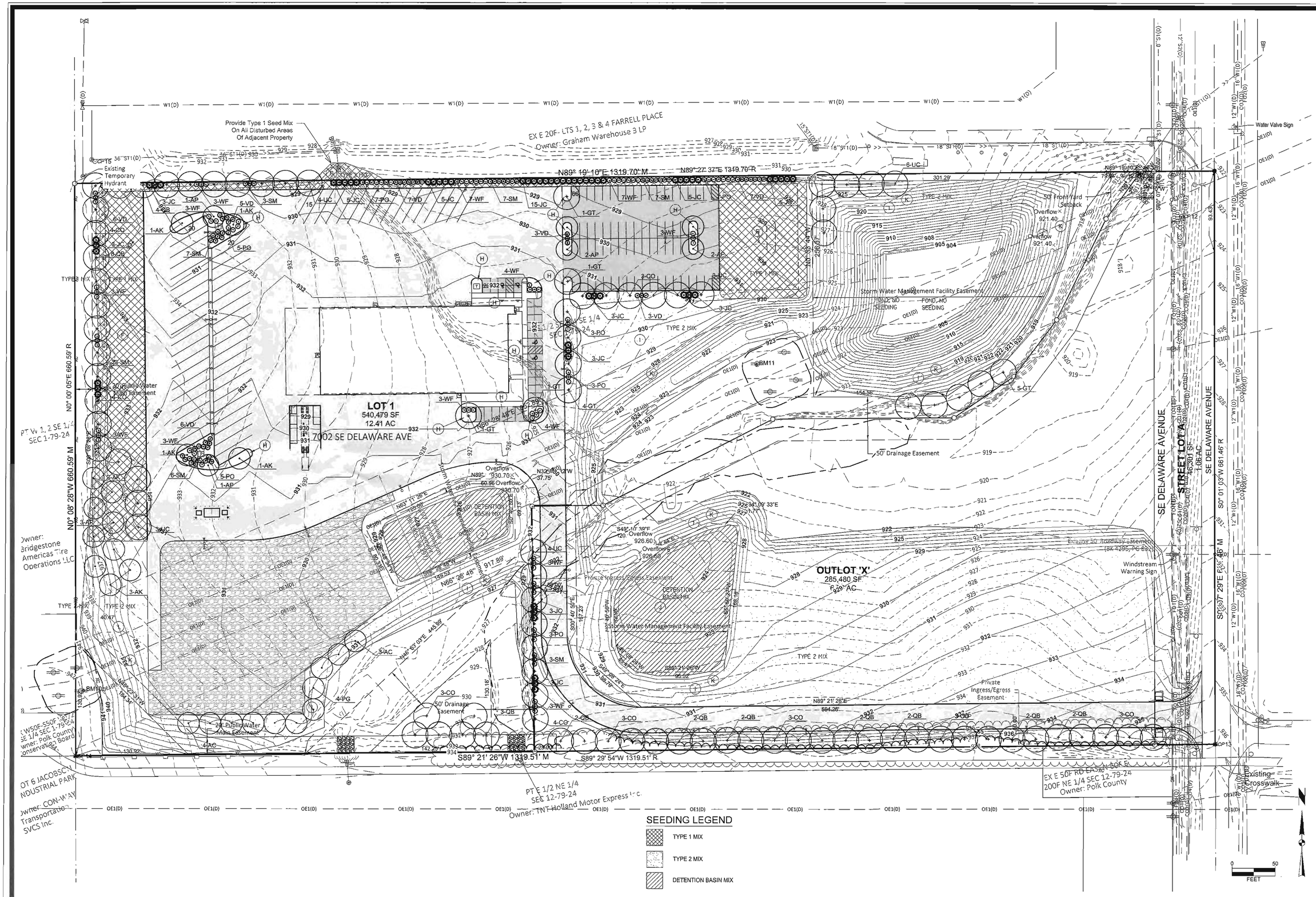

MARK	REVISION	DATE	BY
2	REVISED PER CITY COMMENTS	4-26-19	AWS
1	REVISED PER CITY COMMENTS	4-05-19	AWS

Engineer: CDD | Checked By: BKC | Scale: 1" = 50'
Technician: AWS | Date: 03-01-2019 | Field Bk: | Pg:

118.0994

Sheet 16 of 21

ASI INDUSTRIAL PARK PLAT 1, LOT 1

ANKENY, IOWA

PLANTING PLAN

SNYDER & ASSOCIATES, INC.

2727 S.W. SNYDER BLVD.
ANKENY, IOWA 50023
515-964-2020 | www.snyder-associates.com

SNYDER & ASSOCIATES

118.0994

Sheet 16 of 21

PLANT SCHEDULE

	KEY	BOTANICAL NAME	COMMON NAME	SIZE	COMMENTS
OVERSTORY TREES	AC	Abies concolor	WHITE FIR	6' HT.	B&B
	AP	Acer platanoides 'Columnare'	COLUMNAR NORWAY MAPLE	1½" CAL.	B&B
	AK	Acer rubrum 'Karpick'	KARPICK RED MAPLE	1½" CAL.	B&B
	CO	Celtis occidentalis 'Prairie Pride'	PRAIRIE PRIDE HACKBERRY	1½" CAL.	B&B
	GT	Gleditsia triacanthos var. inermis 'Skyline'	SKYLINE HONEYLOCUST	1½" CAL.	B&B
	PG	Picea glauca 'densata'	BLACK HILLS WHITE SPRUCE	6' HT.	B&B
	QB	Quercus bicolor	SWAMP WHITE OAK	1½" CAL.	B&B
	UC	Ulmus carpinifolia x parvifolia 'Frontier'	FRONTIER ELM	1½" CAL.	B&B
SHRUBS	JC	Juniperus chinensis 'Sea Green'	SEA GREEN JUNIPER	36" Ht.	CONT. (6' O.C.)
	PO	Physocarpus opulifolius 'Donna May'	LITTLE DEVIL NINEBARK	24" Ht.	CONT. (5' O.C.)
	SM	Syringa meyeri 'Palibin'	PALIBIN LILAC	36" Ht.	CONT. (5' O.C.)
	VD	Viburnum dentatum 'Christom'	BLUE MUFFIN VIBURNUM	36" HT.	CONT. (5' O.C.)
	WF	Weigela florida 'Verweil-4'	SONIC BLOOM RED WEIGELA	24" Ht.	CONT. (5' O.C.)

NOTE: QUANTITIES SHOWN ARE APPROXIMATE. CONTRACTOR TO VERIFY PLANT MATERIAL PRIOR TO BIDDING. IN THE CASE OF A DISCREPANCY, THE PLAN QUANTITY SHALL GOVERN.

PLANTING PLAN GENERAL NOTES

A. UTILITY WARNING:
THE UTILITIES SHOWN HAVE BEEN LOCATED FROM FIELD SURVEY INFORMATION AND/OR RECORDS OBTAINED. THE SURVEYOR MAKES NO GUARANTEE THAT THE UTILITIES SHOWN COMPRISE ALL SUCH UTILITIES IN THE AREA, EITHER IN SERVICE OR ABANDONED. THE SURVEY FURTHER DOES NOT WARRANT THAT THE UTILITIES SHOWN ARE IN THE EXACT LOCATION INDICATED.

B. NOTIFY UTILITY OWNERS PRIOR TO BEGINNING ANY CONSTRUCTION. CONTRACTOR IS RESPONSIBLE FOR DETERMINING EXISTENCE, EXACT LOCATION AND DEPTH OF ALL UTILITIES. AVOID DAMAGE TO UTILITIES AND SERVICES DURING CONSTRUCTION. ANY DAMAGE DUE TO THE CONTRACTOR'S CARELESSNESS SHALL BE CORRECTED AT THE CONTRACTOR'S EXPENSE. COORDINATE AND COOPERATE WITH UTILITY COMPANIES DURING CONSTRUCTION.

C. ALL PLANT MATERIAL SHALL AT LEAST MEET MINIMUM REQUIREMENTS SHOWN IN THE "AMERICAN STANDARDS FOR NURSERY STOCK" (ANSI Z60.1-LATEST EDITION).

D. CONTRACTOR SHALL GUARANTEE ALL PLANT MATERIAL FOR A PERIOD OF ONE YEAR FROM DATE OF INSTALLATION.

E. PROVIDE 3-INCH DEPTH SHREDDED HARDWOOD MULCH IN ALL PLANT BED AREAS INDICATED ON PLAN. PROVIDE 3/16" STEEL BLACK EDGING TO DEFINE PLANT BED EDGE WHEN ADJACENT TO TURF.

F. SEED ALL AREAS DISTURBED BY CONSTRUCTION WITH TYPE 1 SUDAS PERMANENT LAWN SEED MIX, UNLESS NOTED OTHERWISE.

G. PROVIDE 2-INCH RIVER GRAVEL PLACED TO A DEPTH OF 4-INCHES WITH WEED BARRIER FABRIC UNDERLAYMENT RING AROUND ALL TREES TO A MIN 3-FOOT PERIMETER. PROVIDE VERTICAL CUT NATURAL EDGE TO A DEPTH OF 4-INCHES.

H. PROVIDE 2-INCH RIVER GRAVEL PLACED TO A DEPTH OF 4-INCHES WITH WEED BARRIER FABRIC UNDERLAYMENT. PROVIDE VERTICAL CUT NATURAL EDGE TO A DEPTH OF 4-INCHES.

I. SEED AREA WITH TYPE 2 SUDAS PERMANENT COOL SEASON MIXTURE FOR SLOPES AND DITCHES.

J. PROVIDE DETENTION BASIN SEED MIX AS PROVIDED BY PRAIRIE MOON NURSERY. PRAIRIEMOON.COM, 32115 PRAIRIE LANE, WINONA, MN 55987, OR APPROVED EQUAL. SEEDING RATE: 11.48 LBS/ACRE. INSTALL AS PER SUDAS SPECIFICATIONS 9010 SEEDING.

K. PROVIDE MECHANICALLY BONDED FIBER MATRIX (MBFM) IMMEDIATELY FOLLOWING SEED APPLICATION ON ALL AREAS SEEDED WITH A SLOPE OF 6:1 OR GREATER. ACCEPTABLE PRODUCTS AND MANUFACTURERS:

PROFILE PRODUCTS LLC. 750 LAKE COOK ROAD-SUITE 400
BUFFALO GROVE, IL 60089
TEL: 1-800-366-1180
WWW.PROFILEPRODUCTS.COM OR APPROVED EQUAL.

LANDSCAPING REQUIREMENTS

LANDSCAPE REQUIREMENTS AND CALCULATIONS:
(AS PER CITY OF ANKENY SITE PLAN OPEN SPACE AND LANDSCAPING REQUIREMENTS)

OPEN SPACE REQUIREMENTS:
541,609 SF (12.4 AC.) OVERALL PROPERTY X 20% MIN. OPEN SPACE = 108,321.80 SF OPEN SPACE REQ'D
TOTAL HARDSURFACE (DRIVES, PARKING AND BUILDINGS) 202,674 SF
(338,935 SF) = 62.6% TOTAL OPEN SPACE PROVIDED

OPEN SPACE LANDSCAPE REQUIREMENTS:
108,321.80 SF/ 3000SF = 36.1 PLANT UNITS REQ'D.
36.1 PU X 2 TREES = 72.2 TREES REQ'D, (69 PROVIDED)
36.1 PU X 6 SHRUBS = 216.6 REQ'D, (217 PROVIDED)

PAVEMENT SHADING REQUIREMENTS:
176,777 SF OF PAVEMENT X 20% = 35,355.40 SF
35,355.40/ 706 SF =50.08 OVERSTORY TREES REQ'D (39 PROVIDED)

—(50) PAVEMENT OVERSTORY TREES PROVIDED WITHIN 15' OF PAVED AREA ON ONE SIDE (COUNTED AT 50%)
—(14) PAVEMENT OVERSTORY TREES PROVIDED WITHIN 15' OF PAVED AREA ON 2 OR MORE SIDES (COUNTED AT 100%)
—16,238 SF PAVEMENT SHADING PROVIDED

TYPE 1 MIX

TYPE 2 MIX

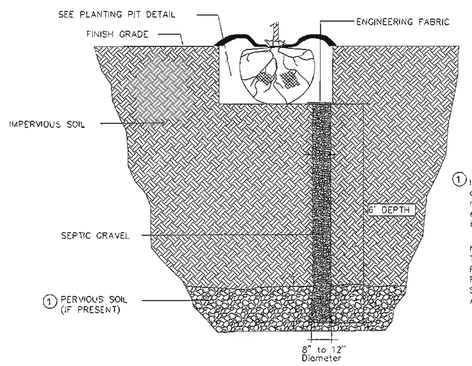

1 If pervious soil is encountered at a depth less the 6 feet, the drainage well may be termineated when the well exists a minimum of 12 inches into the pervious soil layer.

NOTE:
TREE DRAINAGE WELL, ONLY REQUIRED IF IMPERVIOUS SOILS ARE FOUND DURING INSTALLATION AS PER SPECIFICATIONS AND AS APPROVED BY ENGINEER.

3/17 TREE DRAINAGE WELL DETAIL
NO SCALE

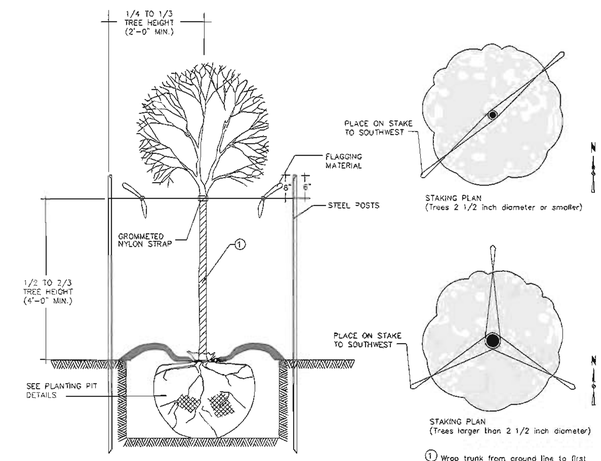

2/17 DECIDUOUS TREE STAKING DETAIL
NO SCALE

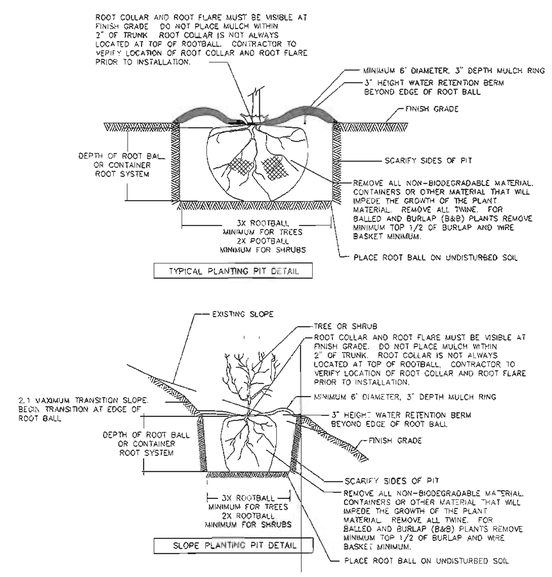

1/17 PLANTING PIT DETAILS
NO SCALE

MARK	REVISION	DATE	BY
2	REVISED PER CITY COMMENTS	4-26-19	AWS
1	REVISED PER CITY COMMENTS	4-05-19	AWS

Engineer: CDD | Checked By: BKC | Scale: 1"=
Technician: AWS | Date: 03-01-2019 | Field Bk: | Pg:
118.0994

Sheet 14 of 21

ANKENY, IOWA

ASI INDUSTRIAL PARK PLAT 1, LOT 1

PLANTING PLAN DETAILS & NOTES

SNYDER & ASSOCIATES, INC.
2727 S.W. SNYDER BLVD.
ANKENY, IOWA 50023
515-964-2020 | www.snyder-associates.com

SNYDER & ASSOCIATES

118.0994

Sheet 17 of 21

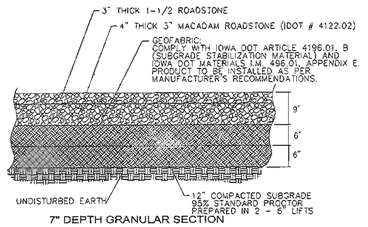

7" DEPTH GRANULAR SECTION
(CROSS SECTION PROVIDED
BY GRADING CONTRACTOR)

1/18 TYPICAL GRANULAR CROSS SECTIONS

NO SCALE

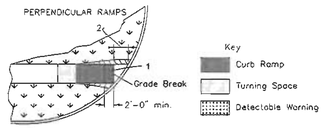

Provide a minimum 2 foot width of detectable warning surfaces in the direction of pedestrian travel across the full width of the curb ramp or turning space, exclusive of curbs or flares.

1. When detectable warning is located on curb ramp surface, orient domes in the direction of pedestrian travel.
2. When the distance between the grade break and the back of curb is less than 5 feet, place detectable warning surface at the bottom of the curb ramp

3/18 DETECTABLE WARNING PLACEMENT

NO SCALE

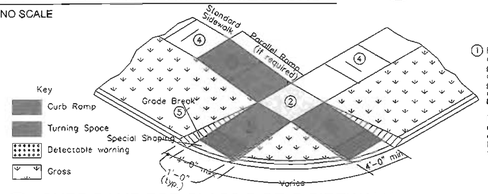

1. Parallel Curb Ramp: If normal sidewalk elevation cannot be achieved with the perpendicular ramp between the street and landing due to limited ramp length, provide a parallel ramp to make up the elevation difference between the landing and the standard sidewalk.

   The length of the parallel ramp is not required to exceed 15 feet, regardless of the resulting slope. Do not exceed 8.3% slope for parallel ramps shorter than 15 feet.
2. Turning Space: Target slope of 1.5% with maximum slope perpendicular to the travel directions of 2.0%. Minimum 4 feet by 4 feet.
3. Perpendicular Curb Ramp: Target running slope of 6.25% with maximum running slope of 8.3%.
4. Target cross slope of 1.5% with a maximum cross slope of 2.0%.
5. Match pedestrian street crossing cross slope or flatter

2/18 CURB RAMP FOR CLASS B OR C SIDEWALK

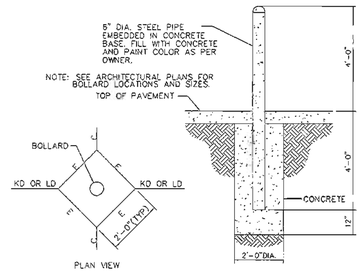

6/18 BOLLARD

NO SCALE

1. Driveway radius (R).
   Residential: 10 foot minimum, 15 foot maximum.
   Commercial and industrial: As specified in the contract documents.
2. Transition the curb height to 0 inches at end of taper/radius or at the front edge of sidewalk. Do not extend raised curb across sidewalk.
3. Pavement thickness.
   Residential: 6 inches minimum.
   Commercial and industrial: 7 inches minimum.
4. Sidewalk thickness through driveway to match thickness of driveway.
5. Center reinforcing bar vertically in the pavement.
6. Match thickness of adjacent roadway, 8 inches minimum.
7. Provide 'E' joint at back of curb unless 'B' joint is specified.
8. For alleys, invert the pavement crown 2% toward center of alley.
9. Target cross slope of 1.5% with a maximum cross slope of 2.0%. If specified in the contract documents, construct the sidewalk through the driveway 5 feet wide to serve as a passing space.
10. If cross slope of adjacent sidewalk panel exceeds 2.0% remove and replace to transition from existing sidewalk to sidewalk through driveway. If elevation change requires a curb ramp, comply with Figure 7030.205; verify need for detectable warning panel with Engineer.

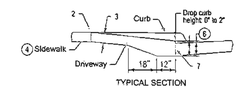

TYPICAL SECTION

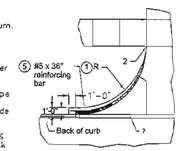

DETAIL B

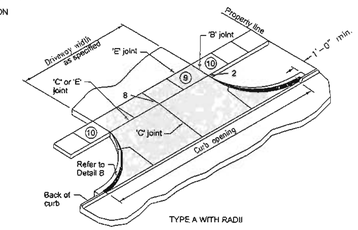

TYPE A WITH RADII

7/18 CONCRETE DRIVEWAY, TYPE A

NO SCALE

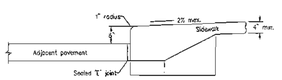

4/18 INTEGRAL SIDEWALK AND CURB DETAIL

NO SCALE

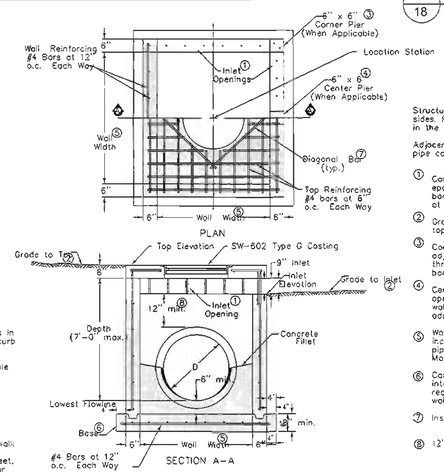

Structure may be built with openings on any or all sides. Provide openings and orientation as specified in the contract documents

Adjacent walls may have different widths based upon pipe configuration, but structure must be rectangular.

1. Construct inlet openings with 15-inch #4 epoxy-coated bars at 8 inches on center. Embed bars a minimum of 3 inches into walls and top at all openings.
2. Grade to inlet elevation on open sides. Grade to top elevation on closed sides.
3. Corner pier required between openings of two adjacent walls. Extend wall reinforcing vertically through pier. Install one additional 15-inch #4 bar in pier.
4. Center pier required at center of any inlet opening with length of 5 feet or greater. Extend wall reinforcing vertically through pier. Install one additional 15-inch #4 bar in pier.
5. Wall widths vary with pipe diameter. Provide 6 inches of wall width (minimum) each side of pipe opening. Minimum wall width is 36 inches. Maximum wall width is 72 inches.
6. Cast-in-place base shown. If base is precast integral with walls, the footprint of base is not required to extend beyond the outer edge of the walls.
7. Install four #4 diagonal bars at all pipe openings.
8. 12" minimum wall height above all pipes.

9/18 SW-513 OPEN-SIDED AREA INTAKE

NO SCALE

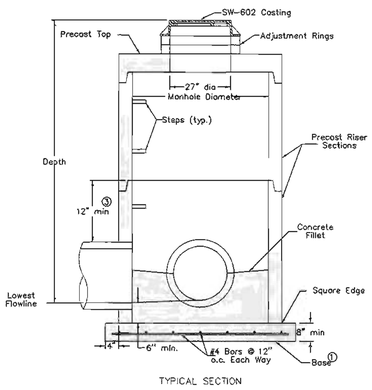

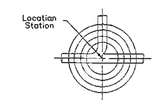

PLAN

1. Cast-in-place base shown. If base is precast integral with bottom riser, the footprint of the base is not required to extend beyond the outer edge of the riser.
2. For additional configurations, maintain a minimum of 12 inches of concrete between vertical edges of pipe openings.

   12 inch minimum riser height above all pipe openings.
3. 12 inch minimum riser height above all pipe openings.

Manhole Diameter (inches)	Maximum Pipe Diameter (inches) for 2 Pipes 2 At 180° Separation	At 90° Separation
48	24	18
60	36	24
72	42	30
84	48	36
96	60	42

10/18 SW-401 CIRCULAR STORM SEWER MANHOLE

NO SCALE

NO SCALE

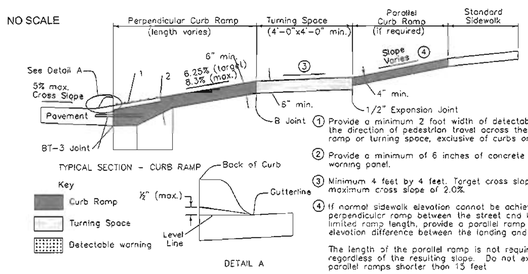

1. Provide a minimum 2 foot width of detectable warning surfaces in the direction of pedestrian travel across the full width of the curb ramp or turning space, exclusive of curbs or flares.
2. Provide a minimum of 6 inches of concrete below the detectable warning panel.
3. Minimum 4 feet by 4 feet. Target cross slope of 1.5% with a maximum cross slope of 2.0%.
4. If normal sidewalk elevation cannot be achieved with the perpendicular ramp between the street and landing due to limited ramp length, provide a parallel ramp to make up the elevation difference between the landing and the standard sidewalk.

   The length of the parallel ramp is not required to exceed 15 feet, regardless of the resulting slope. Do not exceed 8.3% slope for parallel ramps shorter than 15 feet

5/18 GENERAL SIDEWALK AND CURB RAMP DETAILS

NO SCALE

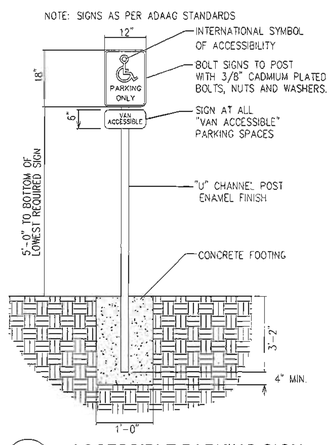

15/18 ACCESSIBLE PARKING SIGN

NO SCALE

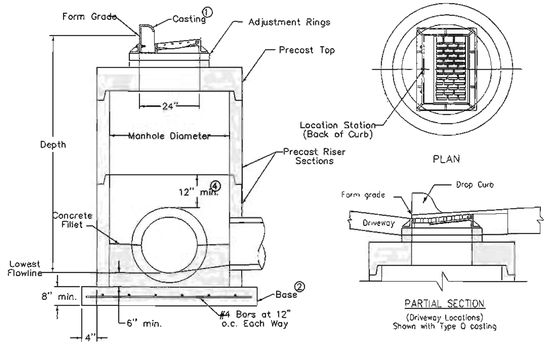

Manhole Diameter (inches)	Maximum Pipe Diameter (inches) for 2 Pipes 4 at 180° Separation	at 90° Separation
48	24	18
60	36	24
72	42	30
84	48	36
96	60	42

Refer to SW-514 for boxout details.

1. SW-603 Type R unless Type O is specified in the contract documents.
2. Cast-in-place base shown. Base may be square. If base is precast integral with walls, the footprint of the base is not required to extend beyond the outer edge of the walls.
3. For additional configurations, maintain a minimum of 12 inches of concrete between vertical edges of pipe openings.
4. 12 inch minimum riser height above all pipes.

16/18 SW-502 CIRCULAR SINGLE GRATE INTAKE

NO SCALE

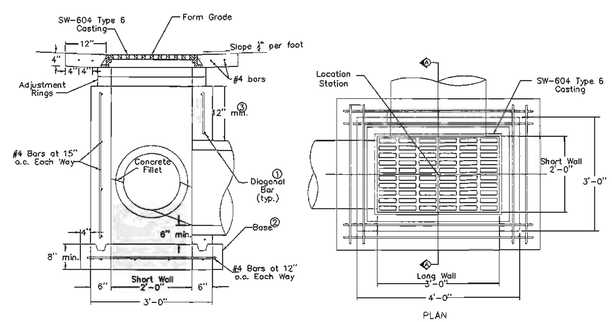

MAXIMUM PIPE DIAMETERS		
Pipe Location	Precast Structure	Cast-in-place Structure
Short Wall	15"	18"
Long Wall	24"	30"

1. Install four #4 diagonal bars at all pipe openings.
2. Cast-in-place base shown. If base is precast integral with walls, the footprint of the base is not required to extend beyond the outer edge of the walls.
3. 12 inch minimum wall height above all pipes.

17/18 SW-511 RECTANGULAR AREA INTAKE

NO SCALE

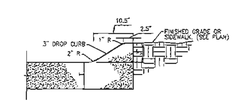

8/18 3" ROLLED CURB

NO SCALE

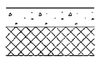

12/18 PAVEMENT SECTION

NO SCALE

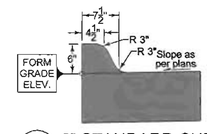

14/18 6" STANDARD CURB

NO SCALE

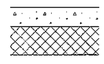

13/18 PAVEMENT SECTION

NO SCALE

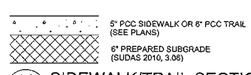

11/18 SIDEWALK/TRAIL SECTION

NO SCALE

MARK	REVISION	DATE	BY
2	REVISED PER CITY COMMENTS	4-26-19	AWS
1	REVISED PER CITY COMMENTS	4-05-19	AWS

Engineer: CDD | Checked By: BKC | Scale: 1" = SCALE
Technician: AWS | Date: 03-01-2019 | Field Bk: Pg:

118.0994

Sheet 18 of 21

ANKENY, IOWA

ASI INDUSTRIAL PARK PLAT 1, LOT 1

SITE DETAILS

SNYDER & ASSOCIATES, INC.
2727 S.W. SNYDER BLVD.
ANKENY, IOWA 50023
515-964-2020 | www.snyder-associates.com

SNYDER & ASSOCIATES

118.0994

Sheet 18 of 21

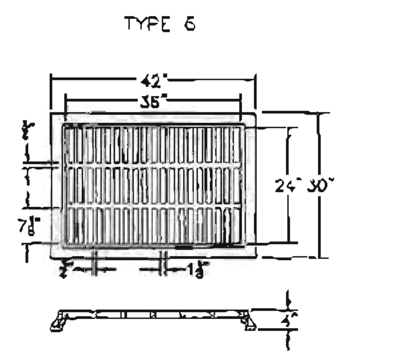

1 TYPE 6 CASTING
19 NO SCALE

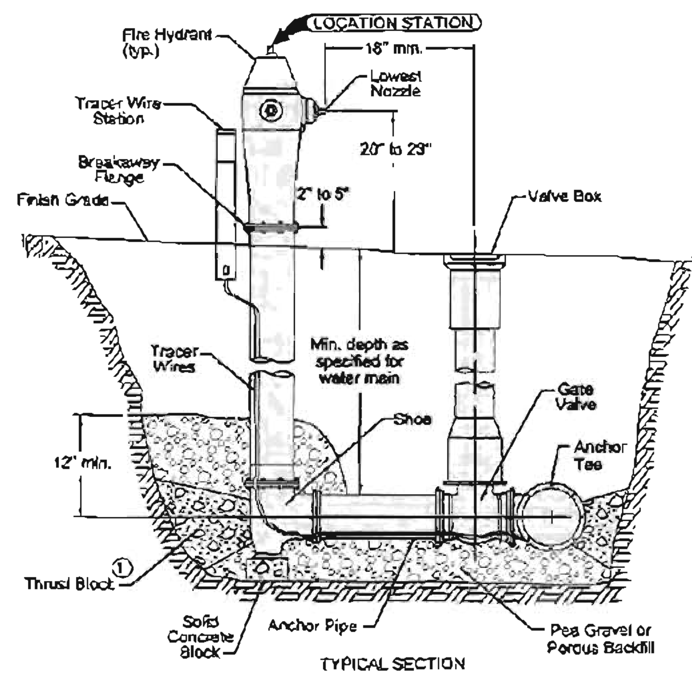

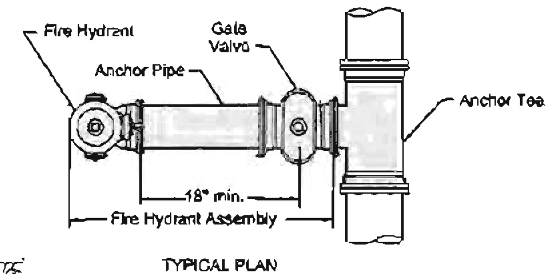

Use ductile iron pipe with restrained mechanical joints for fire hydrant assembly and anchor tee.

① Do not cover drain holes or tracer wire.

2 FIRE HYDRANT ASSEMBLY
19 NO SCALE

① Extend tracer wire up fire hydrant barrel to interior terminals of tracer wire station and back down. Refer to WM-201 for details of fire hydrant assembly.

② Clamp tracer wire to ground rod at system termination points.

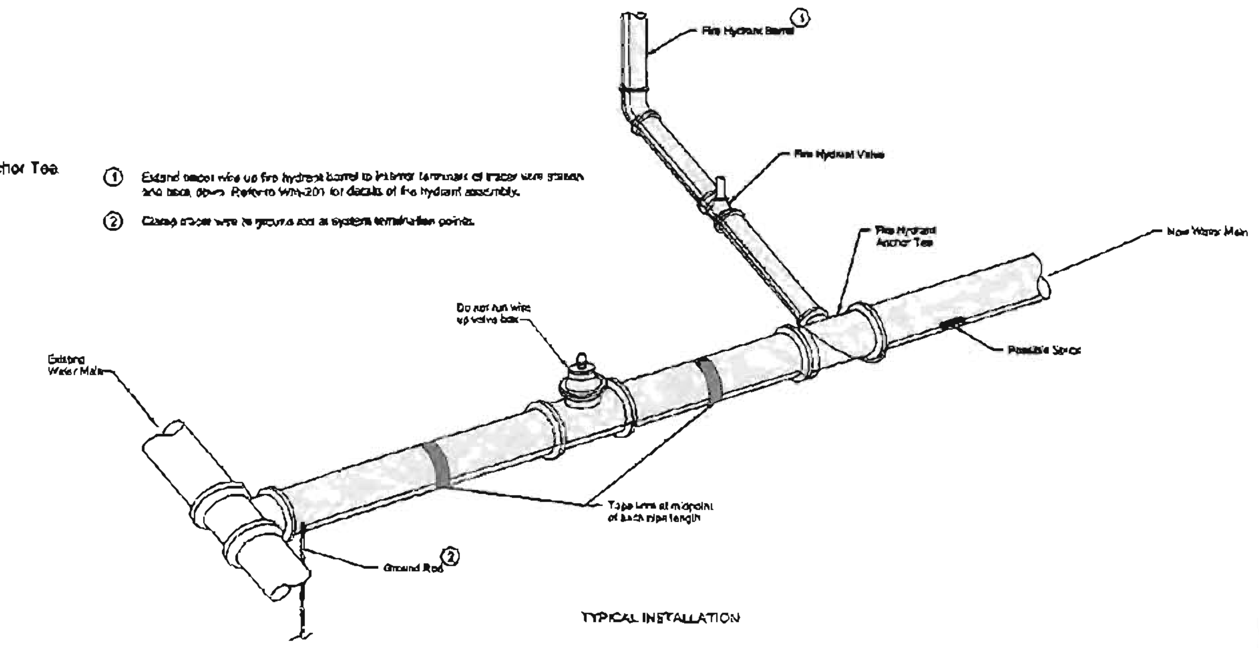

3 TRACER SYSTEM
19 NO SCALE

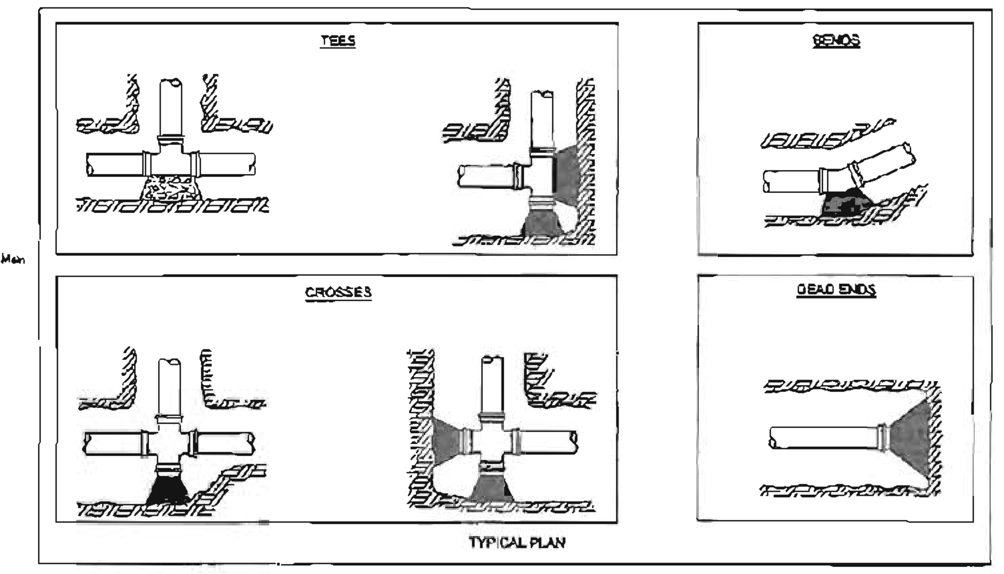

Diameter of Pipe, D (inches)	MINIMUM BEARING SURFACE (SF)				
	Bends				Tees and Dead Ends
	11¼°	22½°	45°	90°	
4	1	1	2	4	3
6	1	2	4	8	6
8	2	4	7	14	10
10	3	6	11	21	15
12	4	8	16	29	21

Minimum surface area based on water pressure of 150 psi and allowable soil pressure of 1,000 psf.

Extend thrust blocks to undisturbed soil. Excavation into trench wall may be necessary.

Form vertical surfaces of poured concrete thrust blocks except on bearing surface.

Encase all fittings in polyethylene wrap. Do not allow concrete to directly contact joints or fitting bolts.

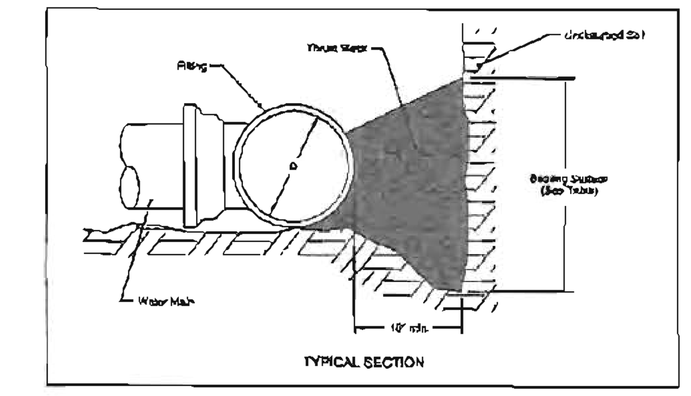

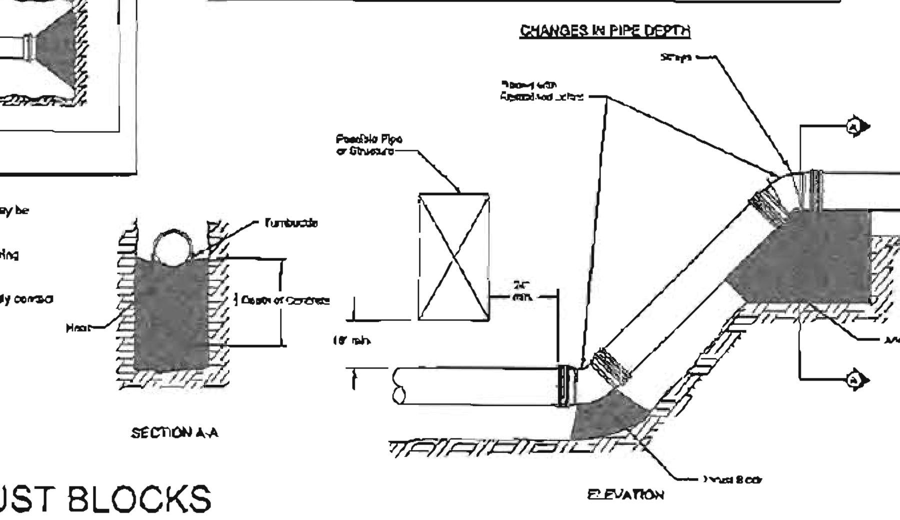

4 THRUST BLOCKS
19 NO SCALE

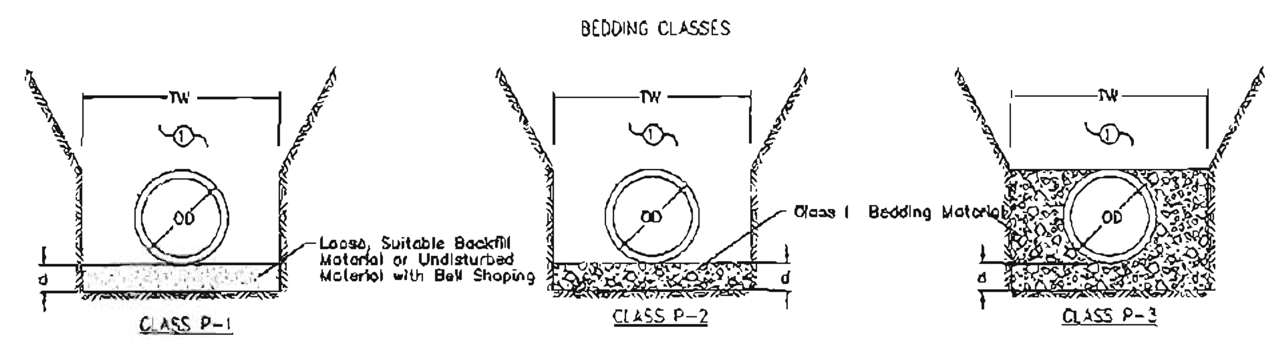

ALLOWABLE BURY DEPTH

DUCTILE IRON, AWWA C151, CLASS 52

Pipe Diameter (inches)	Class P-1 Bedding	Class P-2 Bedding	Class P-3 Bedding
4	40'	40'	40'
6	40'	40'	40'
8	40'	40'	40'
10	36'	40'	40'
12	31'	40'	40'
14	26'	40'	40'
16	23'	37'	40'
18	20'	34'	40'
20	18'	32'	40'
24	16'	29'	35'
30	13'	23'	31'
36	13'	22'	30'
42	13'	21'	29'
48	13'	19'	27'
54	13'	19'	27'

PVC, AWWA C900 & C905, DR18

Pipe Diameter (inches)	Class P-1 Bedding	Class P-2 Bedding	Class P-3 Bedding
4	19'	23'	40'
6	19'	23'	40'
8	19'	23'	40'
10	19'	23'	40'
12	19'	23'	40'
14	19'	23'	40'
16	19'	23'	40'
18	19'	23'	40
20	19	23'	40'
24	19'	23'	40'

① Place remainder of bedding and backfill material as specified in the contract documents.

Key

OD = Outside diameter of pipe

TW = Trench width at top of pipe:
Min = OD+18 inches OR 1.25xOD+12 inches
(whichever is greater)

d = Depth of bedding material below pipe
Min = OD/8 OR 4 inches
(whichever is greater)

5 PRESSURE PIPE TRENCH BEDDING
19 NO SCALE

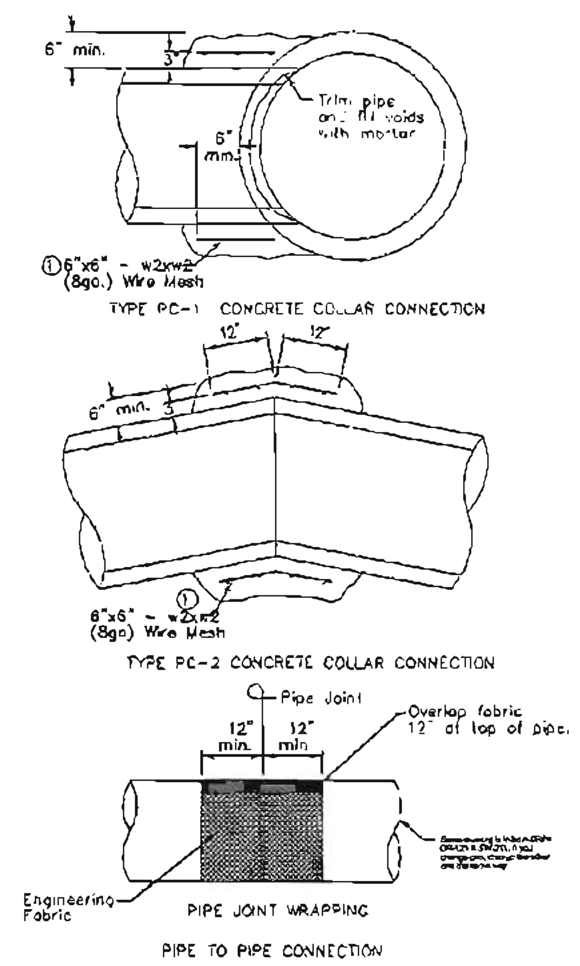

①Lap ends of wire mesh a minimum of 6 inches.

②Concrete collar is required when annular space between the outside of the pipe and the wall of the structure is 3 inches or greater.

③Provide two #4 hoop bars in concrete collar. Lap bars a minimum of 6 inches.

④Trowel concrete flush with inside wall of structure.

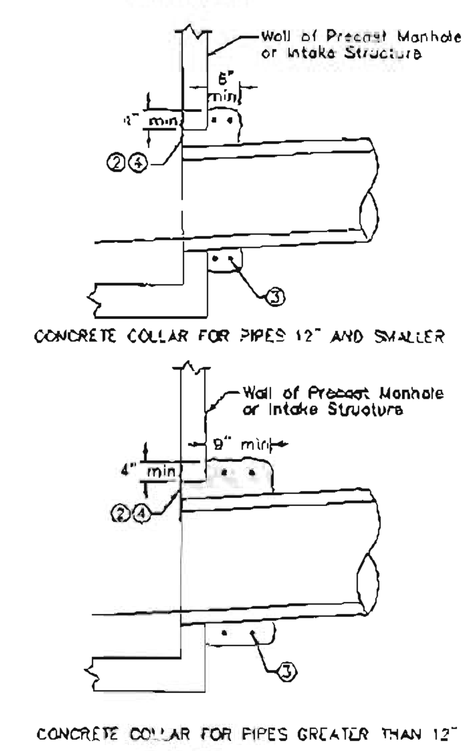

6 STORM SEWER PIPE CONNECTIONS
19 NO SCALE

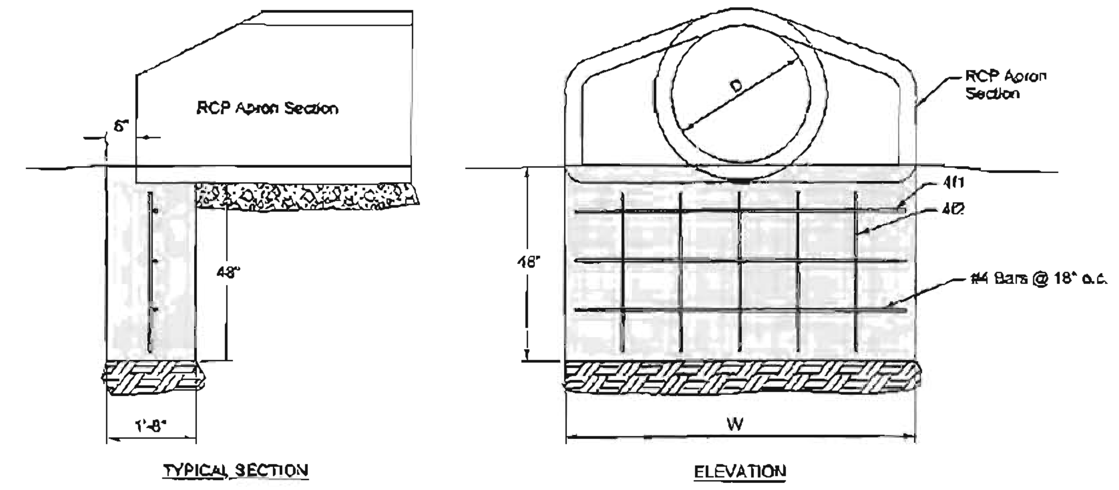

REINFORCING BAR LIST

D	W	Mark	Size	Length	Count
12"	2'-4"	4f1	4	2'-0"	3
		4f2	4	3'-8"	2
15"	2'-10 ½"	4f1	4	2'-6 ½"	3
		4f2	4	3'-8"	2
18"	3'-5"	4f1	4	3'-1"	3
		4f2	4	3'-8"	3
24"	4'-6"	4f1	4	4'-2"	3
		4f2	4	3'-8"	3
30"	5'-7"	4f1	4	5'-3"	3
		4f2	4	3'-8"	4
36"	6'-8"	4f1	4	6'-4"	3
		4f2	4	3'-8"	5
42"	7'-3"	4f1	4	6'-11"	3
		4f2	4	3'-8"	5

D	W	Mark	Size	Length	Count
48"	7'-10"	4f1	4	7'-6"	3
		4f2	4	3'-8"	6
54"	8'-5"	4f1	4	8'-1"	3
		4f2	4	3'-8"	6
60"	8'-11"	4f1	4	8'-7"	3
		4f2	4	3'-8"	6
66"	8'-11"	4f1	4	8'-7"	3
		4f2	4	3'-8"	6
72"	10'-0"	4f1	4	9'-8"	3
		4f2	4	3'-8"	7
78"	10'-7"	4f1	4	10'-3"	3
		4f2	4	3'-8"	7
84"	11'-1"	4f1	4	10'-9"	3
		4f2	4	3'-8"	8

7 RCP APRON SECTION
19 NO SCALE

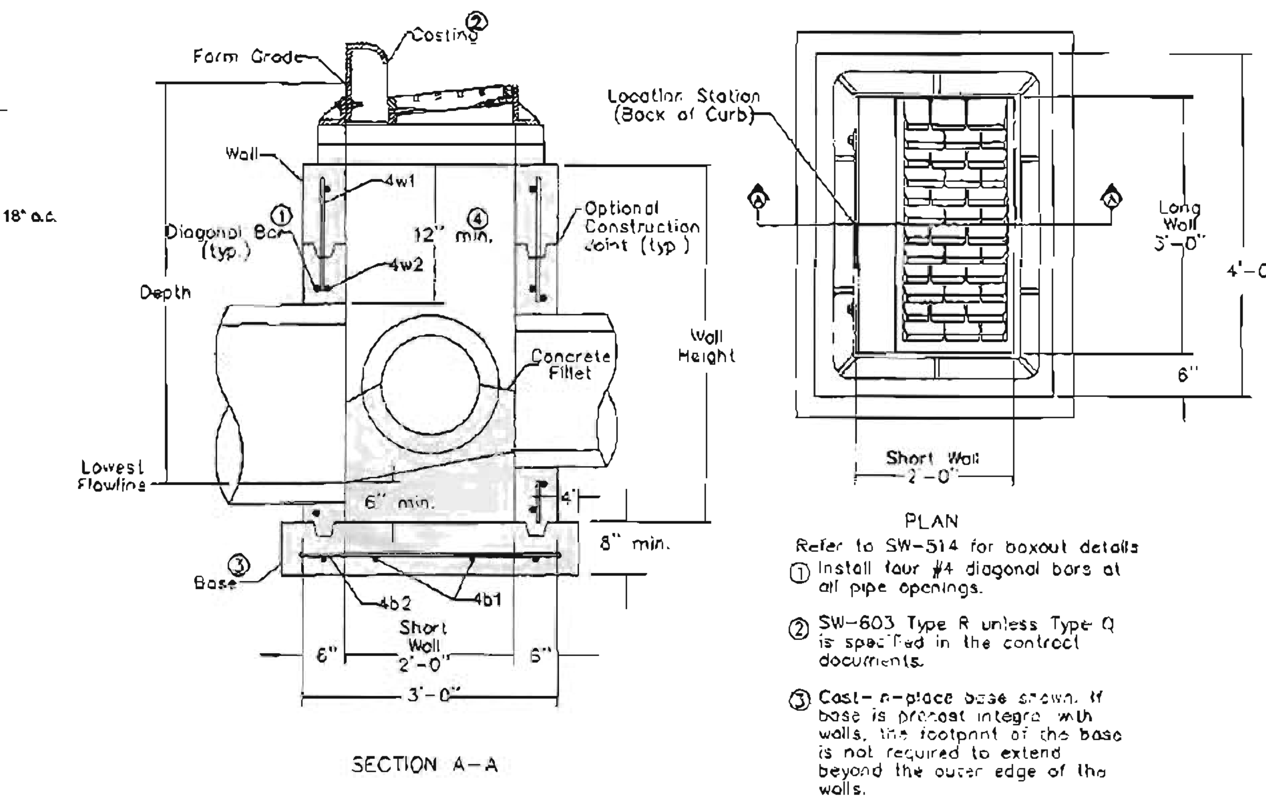

Refer to SW-514 for boxout details

① Install four #4 diagonal bars at all pipe openings.

② SW-603 Type R unless Type Q is specified in the contract documents.

③ Cast-in-place base shown. If base is precast integral with walls, the footprint of the base is not required to extend beyond the outer edge of the walls.

④ 12 inch minimum wall height above all pipes.

REINFORCING BAR LIST

Mark	Size	Location	Shape	Length	Count	Spacing
4w1	4	Walls	Wall	Height minus 4"	14	12"
4w2	4	LongWalls		3'-6"	Varies	12"
4w3	4	ShortWalls		2'-8"	Varies	12"
4b1	4	Base		4'-2"	4	10"
4b2	4	Base		3'-2"	5	10"

MAXIMUM PIPE DIAMETERS

Pipe Location	Precast Structure	Cast-in-place Structure
Short Wall	15"	18"
Long Wall	24"	30"

8 SW-501 SINGLE GRATE INTAKE
19 NO SCALE

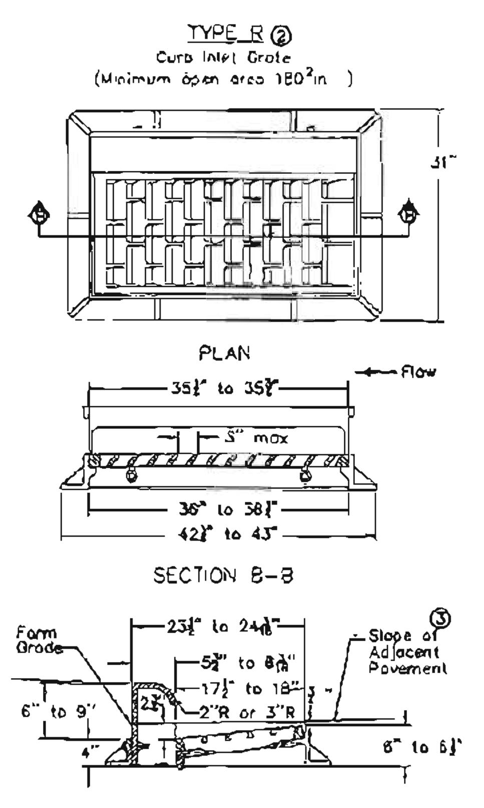

① For use at curb drops for driveways. Use only when specified in the contract documents.

② Provide bicycle-safe vane-style grate. At low points, grates with vanes facing both directions of flow are allowed.

③ For details of boxout pavement, refer to SW-514

9 TYPE R CASTING
19 NO SCALE

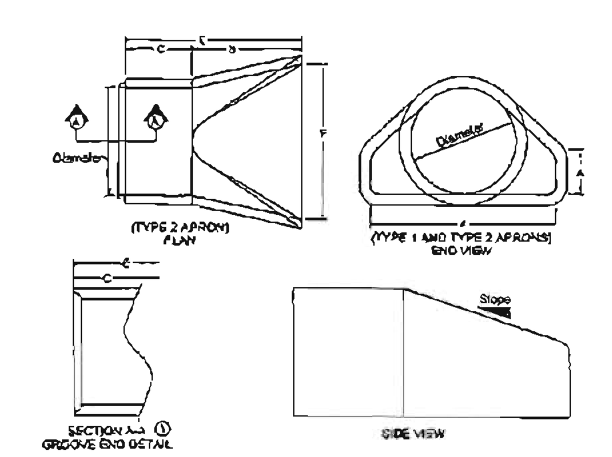

TYPE 2 APRONS						
DIAM	SLOPE	A	B	MINIMUM C	MINIMUM E	F
12"	2.4:1	4"	2'-0"	4'-[illegible]	5'-[illegible]	7'-0"
15"	2.4:1	6"	2'-3"	5'-10"	6'-1"	7'-3"
18"	2.3:1	9"	2'-3"	5'-10"	6'-1"	7'-0"
21"	2.4:1	9"	3'-0"	[illegible]	6'-1"	7'-3"
24"	2.4:1	[illegible]	[illegible]	[illegible]	[illegible]	[illegible]
27"	2.3:1	10½"	[illegible]	[illegible]	[illegible]	[illegible]
30"	2.2:1	12"	4'-6"	[illegible]	[illegible]	5'-0"
36"	2.2:1	15"	[illegible]	[illegible]	6'-0"	[illegible]
42"	2.6:1	21"	[illegible]	[illegible]	5'-0"	[illegible]
48"	2.1:1	24"	6'-0"	[illegible]	[illegible]	[illegible]
54"	1.9:1	24"	5'-5"	[illegible]	[illegible]	7'-6"
60"	1.4:1	24"	5'-0"	5'-0"	[illegible]	8'-0"
66"	1.7:1	[illegible]	6'-0"	2'-3"	6'-3"	8'-0"
72"	1.4:1	[illegible]	8'-6"	[illegible]	6'-3"	9'-0"
78"	1.8:1	[illegible]	[illegible]	[illegible]	[illegible]	9'-6"
84"	1.4:1	[illegible]	7'-6"	[illegible]	[illegible]	10'-0"

Dimension 'B' shown is the minimum and is considered the design length. Adjust for any difference between the actual length of concrete apron installed and the length indicated below for the length of concrete culvert pipe furnished.

① Tongue end used on inlet end section. Groove end used on outlet end section.

10 CIRCULAR CONCRETE APRON
19 NO SCALE

Key

OD = Outside diameter of pipe

TW = Trench width at top of pipe:
Min. = OD+18 inches OR 1.25xOD+12 inches
(whichever is greater)

• Place remainder of bedding and backfill materials as specified in the contract documents.

• Minimum depth of bury 12 inches or as specified by the manufacturer.

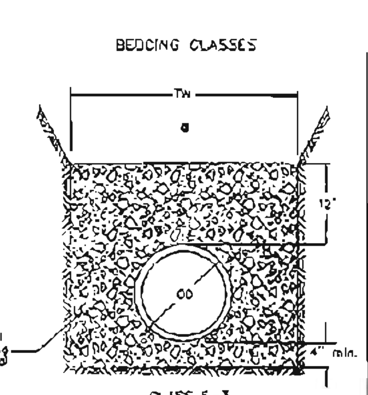

ALLOWABLE BURY DEPTH
PVC PIPE

Pipe Diameter (in)	ASTM D 3034 Solid Wall SDR 23.5
6	30'
8	30'
10	30'
12	30'
15	30'
18	---
21	---
24	---
27	---
30	---
33	---
36	---
42	---
48	---
54	---
60	---

HDPE PIPE

Pipe Diameter (in)	AASHTO M 294
12	8'
15	9'
18	9'
24	9'
30	9'
36	9'
42	8'
48	8'
54	8'
60	8'

11 FLEXIBLE GRAVITY PIPE TRENCH BEDDING
19 NO SCALE

RCP AND VCP CIRCULAR PIPE BEDDING ①

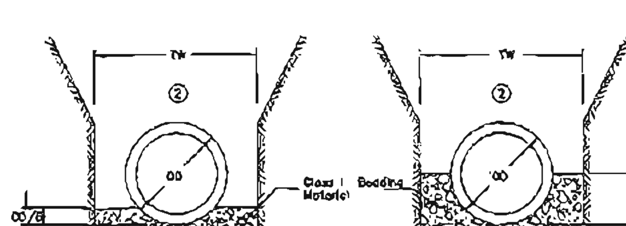

Key

OD = Outside diameter of pipe

DS = Outside span of pipe

TW = Trench width at top of pipe
Min. = OD+18 inches
Max.= 1.25xOD+12 inches OR
54 inches (whichever is greater)

d = Depth of bedding material below pipe
OD/8 or OS/8, OR 4 inches
(whichever is greater)

CLASS III RCP

Pipe Diameter (in)	Class R-1 Bedding	Class R-2 Bedding
12	7'	10'
15	8'	10'
18	8'	11'
21	8'	11'
24	8'	12'
27	10'	15'
30	11'	15'
33	11'	15'
36	11'	15'
42	11'	15'
48	11'	15'
54	11'	15'
60	11'	15'
66	11'	15'
72	11'	15'

① Use Bedding Class R-1 or R-2 unless specified otherwise.

② Place remainder of bedding and backfill materials as specified in the contract documents.

12 RIGID GRAVITY PIPE TRENCH BEDDING
19 NO SCALE

Refer to the contract documents for specific material and placement requirements

① Required only when specified in the contract documents or when directed by the Engineer.

Key

OD = Outside diameter of pipe

D = Inside diameter of pipe

TW = Trench width at top of pipe

d = Depth of bedding material below pipe

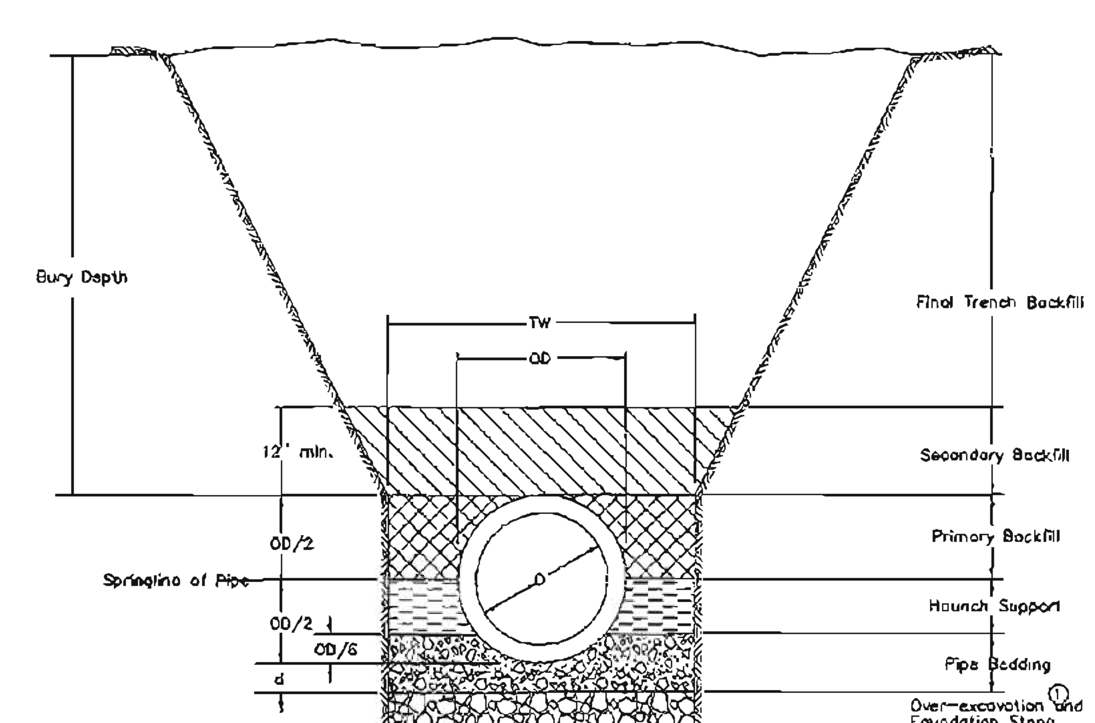

13 TRENCH BEDDING AND BACKFILL ZONES
19 NO SCALE

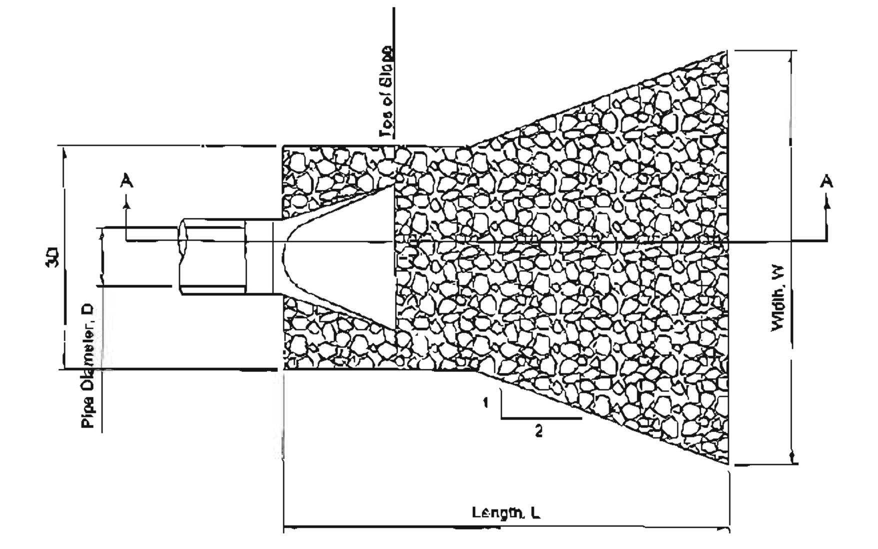

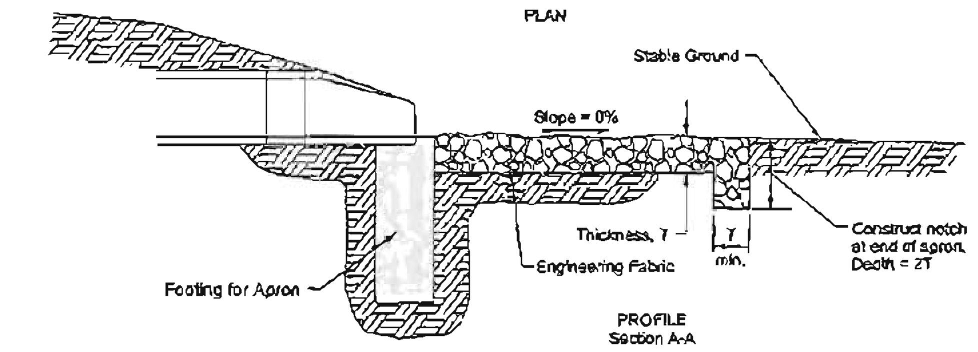

14 RIPRAP FOR PIPE OUTLET
19 NO SCALE

MARK	REVISION	DATE	BY
2	REVISED PER CITY COMMENTS		AWS
1	REVISED PER CITY COMMENTS	4-05-19	AWS

Engineer: CDD | Checked By: BKC | Scale: 1" = SCALE
Technician: AWS | Date: 03-01-2019 | Field Bk. Pg:
118.0994
Sheet 19 of 21

ASI INDUSTRIAL PARK PLAT 1, LOT 1
ANKENY, IOWA

SITE DETAILS

SNYDER & ASSOCIATES, INC.
2727 S.W. SNYDER BLVD.
ANKENY, IOWA 50023
515-964-2020 | www.snyder-associates.com

SNYDER & ASSOCIATES

118.0994

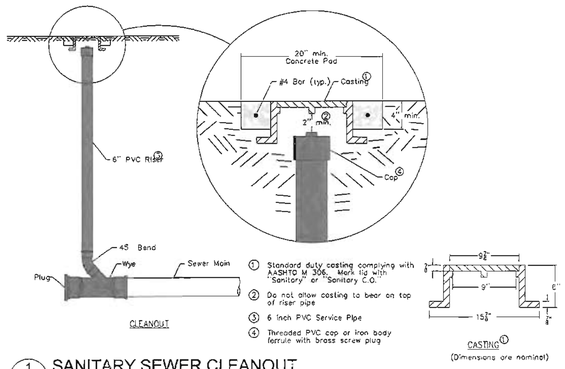

1. Standard duty casting complying with AASHTO M 306. Mark lid with "Sanitary" or "Sanitary C.O."
2. Do not allow casting to bear on top of riser pipe
3. 6 Inch PVC Service Pipe
4. Threaded PVC cap or iron body ferrule with brass screw plug

1/20 SANITARY SEWER CLEANOUT
NO SCALE

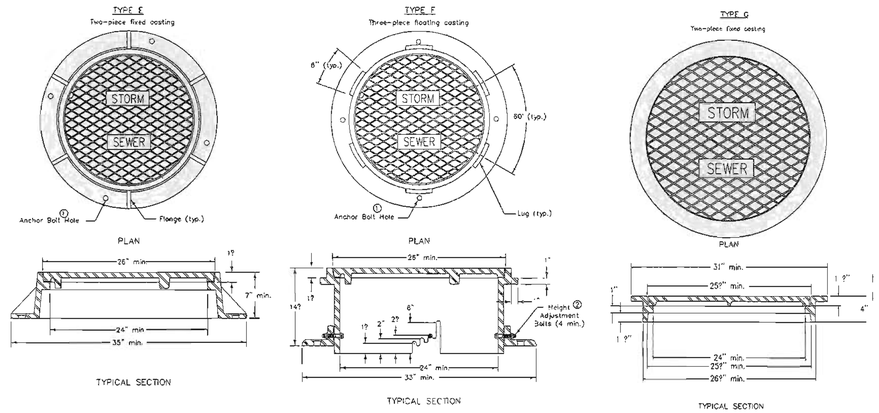

Frame Notes:
Size and spacing of lugs and flanges may vary.

Cover Notes.
Roughness pattern and text styles may vary.
Minimum one concealed pickhole.

1. When the contract documents require the frame to be attached to the structure, drill four 7/8" diameter holes or slots, equally spaced around frame.
2. Set casting at proper grade using one of the adjustment slots. Remove bolts upon completion of paving.

2/20 CASTINGS FOR STORM SEWER MANHOLES
NO SCALE

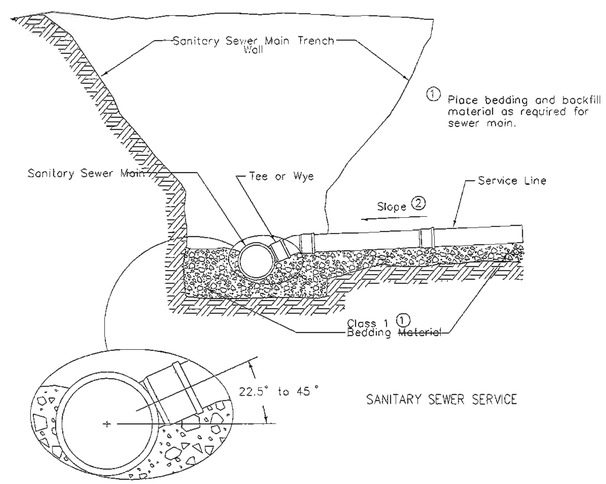

3/20 SANITARY SEWER SERVICE STUB
NO SCALE

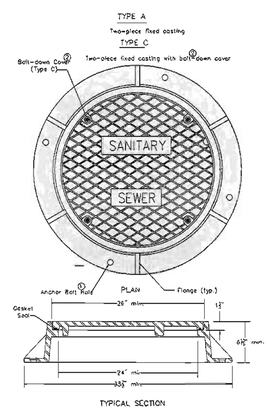

Frame Notes:
Size and spacing of lugs and flanges may vary.

Cover Notes:
Roughness pattern and text style may vary.
Minimum one concealed pickhole.

1. When the contract documents require the frame to be attached to the structure, drill four 7/8" diameter holes or slots, equally spaced around frame.
2. If specified, furnish bolt down frame and cover with four 7/8" x 2 1/2" stainless steel, hex head, recessed cap screws. Secure cover with screws, washers, and rubber gasket seals.

4/20 CASTINGS FOR SANITARY SEWER MANHOLES
NO SCALE

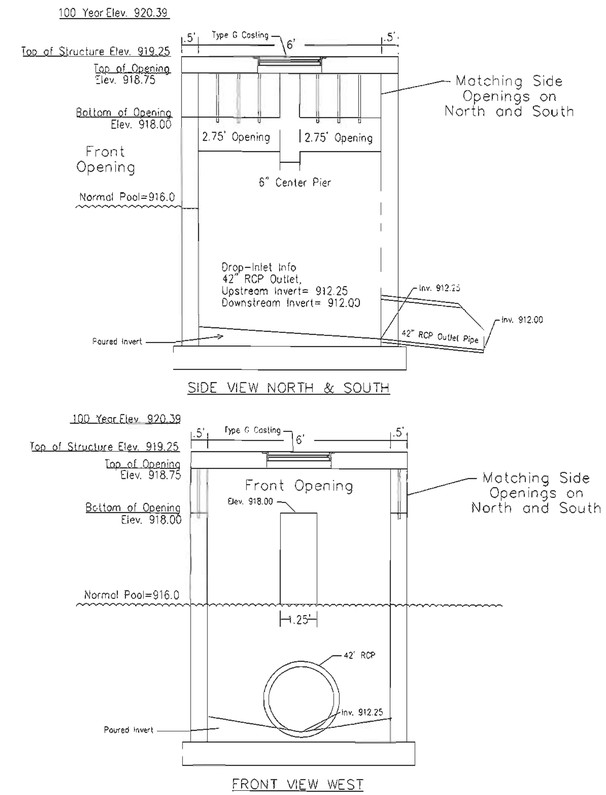

5/20 SW-513, NE BASIN INTAKE OUTLET (ST- 28)
NO SCALE

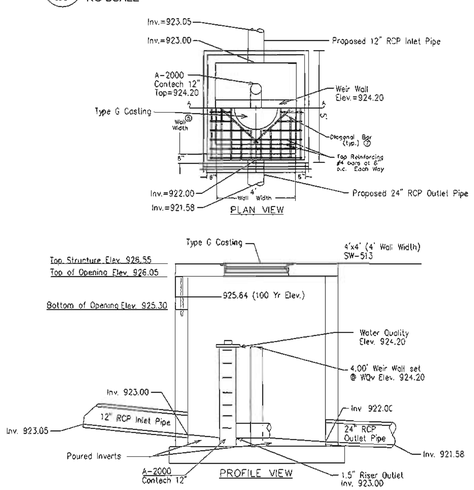

6/20 MODIFIED SW-513, ROADWAY AREA INTAKE OUTLET (ST- 27)
NO SCALE

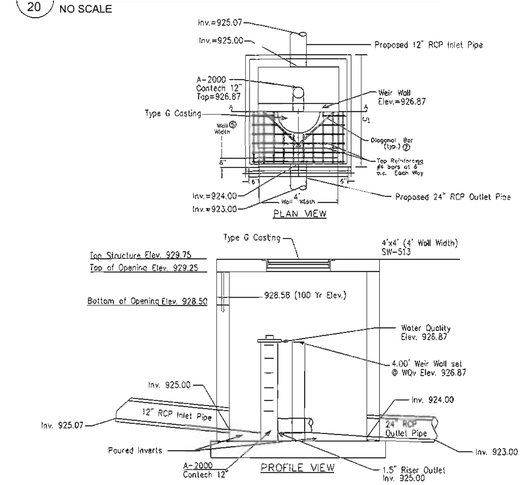

7/20 MODIFIED SW-513, GRANULAR AREA INTAKE OUTLET (ST- 19A)
NO SCALE

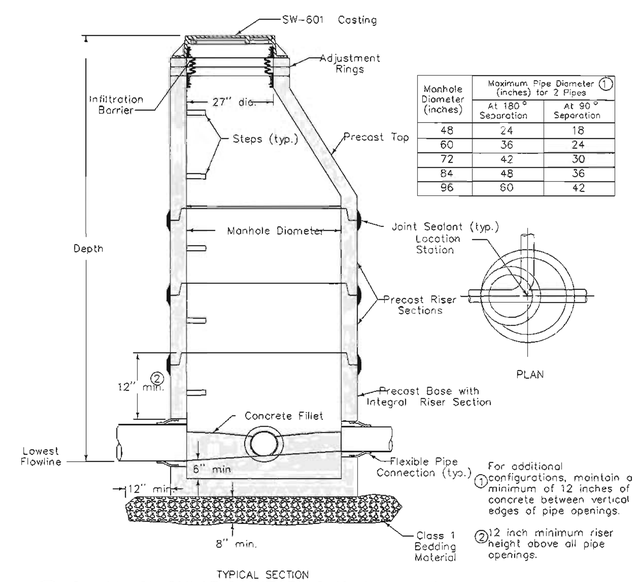

Manhole Diameter (inches)	Maximum Pipe Diameter (inches) for 2 Pipes (1)	
	At 180° Separation	At 90° Separation
48	24	18
60	36	24
72	42	30
84	48	36
96	60	42

1. For additional configurations, maintain a minimum of 12 inches of concrete between vertical edges of pipe openings.
2. 12 inch minimum riser height above all pipe openings.

8/20 SW-301 CIRCULAR SANITARY SEWER MANHOLE
NO SCALE

MARK	REVISION	DATE	BY
2	REVISED PER CITY COMMENTS	4-26-19	AWS
1	REVISED PER CITY COMMENTS	4-05-19	AWS

Engineer: CDD | Checked By: BKC | Scale: 1" = SCALE
Technician: AWS | Date: 03-01-2019 | Field Bk: | Pg:

118.0994

Sheet 20 of 21

ANKENY, IOWA

ASI INDUSTRIAL PARK PLAT 1, LOT 1

SITE DETAILS

SNYDER & ASSOCIATES, INC.
2727 S.W. SNYDER BLVD.
ANKENY, IOWA 50023
515-964-2020 | www.snyder-associates.com

SNYDER & ASSOCIATES

118.0994

Sheet 20 of 21

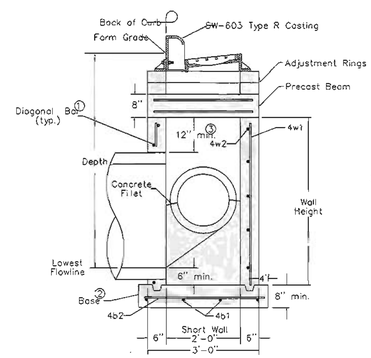

SECTION A-A

Refer to SW-514 for boxout details.

1. Install four #4 diagonal bars at all pipe openings.
2. Cast-in-place base shown. If base is precast integral with walls, the footprint of the base is not required to extend beyond the outer edge of the walls.
3. 12 inch minimum wall height above all pipes.

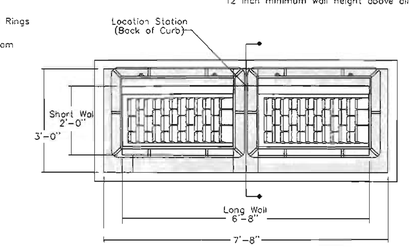

PLAN

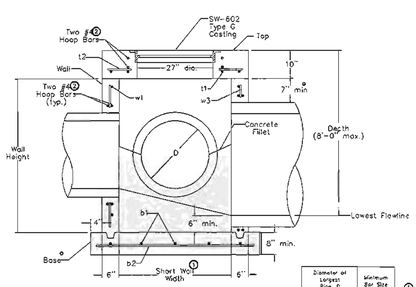

TYPICAL SECTION

Adjacent walls may have different widths based upon pipe configuration, but structure must be rectangular.

1. Cast-in-place base shown. If base is precast integral with walls, the footprint of the base is not required to extend beyond the outer edge of the walls.
2. Wall widths vary with pipe diameter and range from 40 inches minimum to 77 inches maximum. Provide 6 inches of wall width (minimum) each side of pipe opening.
3. Provide two #4 hoop bars at top opening and at all pipe openings.
4. 7 inch minimum wall height above all pipes.

Diameter of Largest Pipe, D	Minimum Bar Size
48" or 54"	6
33" to 42"	5
30" or smaller	4

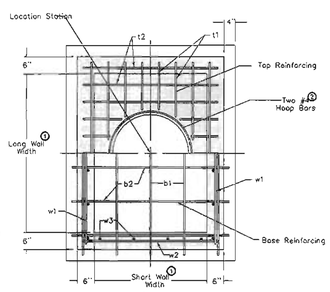

1. Wall widths vary with pipe diameter and range from 40 inches minimum to 77 inches maximum. Provide 6 inches of wall width (minimum) each side of pipe opening.
2. Provide two #4 hoop bars at top opening and at all pipe openings.

REINFORCING BAR LIST					
Mark	Size	Location	Shape	Length	Spacing
t1	See Table	Top	——	Long Wall plus 8'-6"	
t2	See Table	Top	——	Short Wall plus 8'-6"	
b1	See Table	Base	——	Long Wall plus 4'-12"	
b2	See Table	Base	——	Short Wall plus 1'-12"	
w1	See Table	Walls	——	Long Wall plus 8'-12"	
w2	See Table	Walls	——	Short Wall plus 8'-12"	
w3	See Table	Walls	——	Wall Height minus 4'-12"	

*Place a minimum of one w1 bar above each pipe opening

1/21 SW-406 SHALLOW RECTANGULAR STORM SEWER MANHOLE

NO SCALE

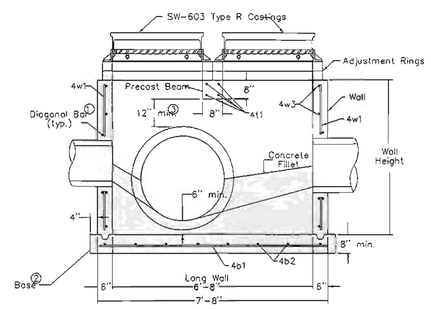

TYPICAL SECTION

1. Install four #4 diagonal bars at all pipe openings
2. Cast-in-place base shown. If base is precast integral with walls, the footprint of the base is not required to extend beyond the outer edge of the walls.
3. 12 inch minimum wall height above all pipes.

REINFORCING BAR LIST						
Mark	Size	Location	Shape	Count	Length	Spacing
4t1	4	Beam	——	4	2'-8"	4"
4b1	4	Base	——	4	7'-10"	10"
4b2	4	Base	——	8	3'-2"	12"
4w1	4	Walls	——	20	Wall Height minus 4"	12"
4w2	4	Long Walls	——	Varies	2'-4"	12"
4w3	4	Short Walls	——	Varies	2'-8"	12"

MAXIMUM PIPE DIAMETERS		
Pipe Location	Precast Structure	Cast-in-place Structure
Short Wall	15"	18"
Long Wall	60"	66"

2/21 SW-505 DOUBLE GRATE INTAKE

NO SCALE

MARK	REVISION	DATE	BY
2	REVISED PER CITY COMMENTS	4-26-19	AWS
1	REVISED PER CITY COMMENTS	4-05-19	AWS

Engineer: CDD | Checked By: BKC | Scale: 1" = SCALE

Technician: AWS | Date: 03-01-2019 | Field Bk: | Pg:

118.0994

Sheet 21 of 21

ASI INDUSTRIAL PARK PLAT 1, LOT 1

SITE DETAILS

ANKENY, IOWA

SNYDER & ASSOCIATES, INC.

2727 S.W. SNYDER BLVD.
ANKENY, IOWA 50023
515-964-2020 | www.snyder-associates.com

SNYDER & ASSOCIATES

118.0994

Sheet 21 of 21